SH. 1 OF 1	CAT NO 120A-9	CUSTOMER DIMENSIONS	DO NOT SEPARATE PRINT FROM WORK	SIZE	RANGE: 0-9" GRADUATIONS: .001"

OPER	TOOLS

* =Accuracy (in): 0-6" (+/-.001") 6-9" (+/-.0015")

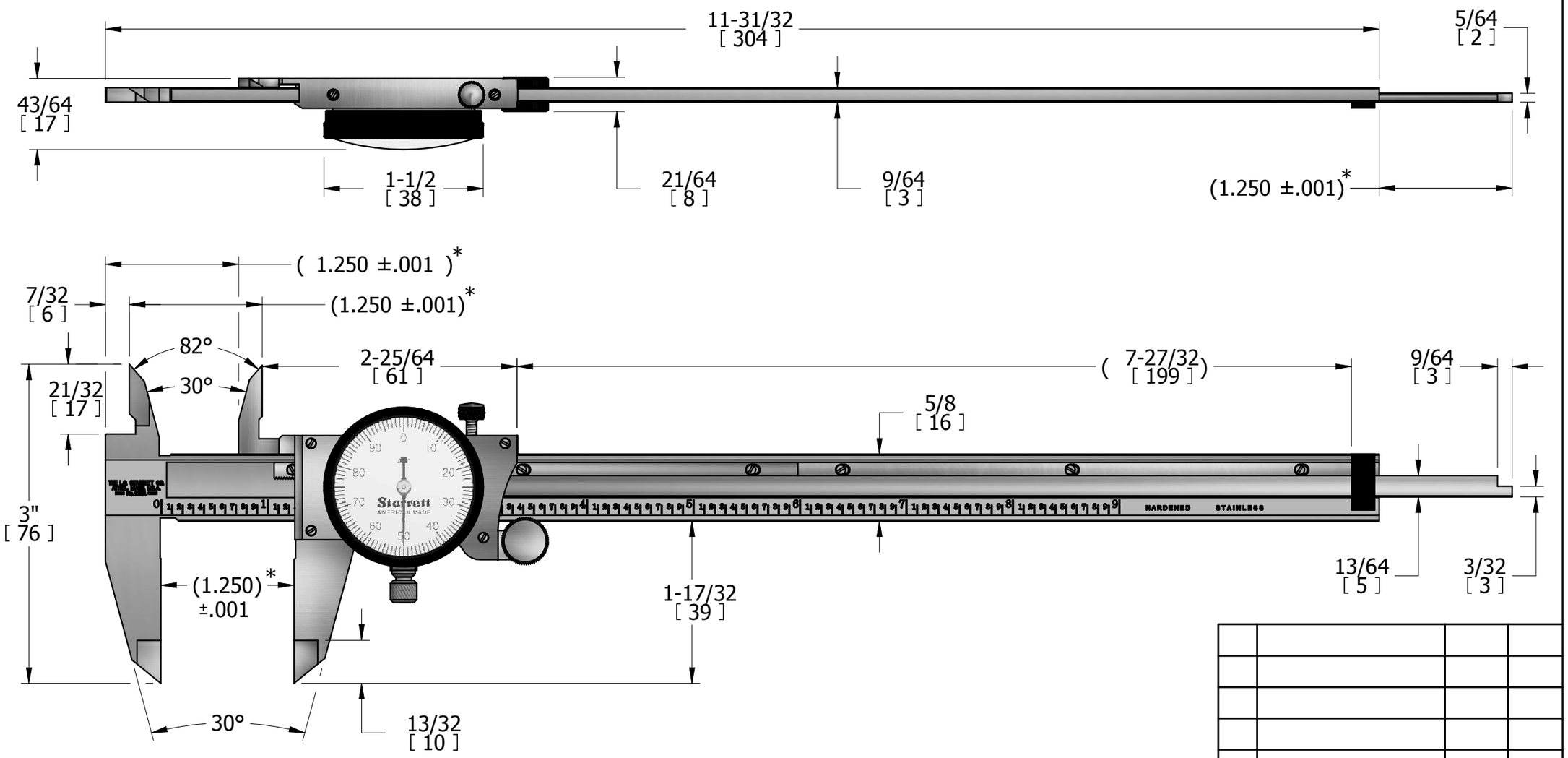

REV	DESCRIPTION	DATE	BY

DR MMB	CHK	DATE

DIAL CALIPER ASSEMBLY

TOLERANCES - UNLESS OTHERWISE SPECIFIED	1 PLACE DEC. or REF. : +/- .015" --- 0.4 mm 2 PLACE DEC. : +/- .010" --- 0.25 mm	3 PLACE DEC. : +/- .003" --- 0.08 mm 4 PLACE DEC. : +/- .0005" --- 0.01 mm	FRACTIONAL: +/- 1/64" ANGULAR: +/- 1 DEGREE	THE L.S. STARRETT CO. ATHOL, MASS.