Southwire™ | TOOLS & EQUIPMENT

MATERIAL HANDLING

BUILT FOR DURABILITY.
BUILT FOR RELIABILITY.
BUILT FOR WORK.™

1-855-798-6657 | SOUTHWIRETOOLS.COM

©2017 Southwire Company, LLC. All rights reserved.
®Registered Trademark and ™Trademark of Southwire Company, LLC.

PIANO BOXES

The Piano Boxes feature shelves, an interior storage grid for hanging items, gas spring guards to protect springs from shifting-load damage, and at-a-glance easy access for small, big and in-between tools, equipment and supplies. This box is ideal for storage and security on the jobsite, workshop or in the plant.

PB603034

- When the cover is closed, PB603034 box can be used as a work table
- Caster-ready 7-gauge steel skids to accommodate optional casters
- Four-way skids allow access from any side, making it easier and faster to transport
- Recessed handles for positive gripping even with gloves on
- Recessed lock housing for protection against theft
- Improved ball stud bracket - added strength reduces the potential for breakage and improves durability
- 60" Width x 30" Depth x 34" Height
- Casters shown are sold separately

We've got it
MADE IN AMERICA™

PB483048

- Bi-fold cover folds completely out of the way for unrestricted access
- Caster-ready 7-gauge steel skids to accommodate optional casters
- Recessed handles for positive gripping even with gloves on
- Recessed lock housing for protection against theft
- Fits perfectly in the width of a full-size truck bed
- Heavy-duty hinges are extra durable and resist pry-ins
- 48" Width x 30" Depth x 48" Height
- Casters shown are sold separately

We've got it
MADE IN AMERICA™

PB603049

- Caster-ready 7-gauge steel skids to accommodate optional casters
- Recessed handles for positive gripping even with gloves on
- Gas spring guards to prevent damage from shifting loads
- Recessed lock housing for protection against theft
- 60" Width x 30" Depth x 48.5" Height
- Casters shown are sold separately

We've got it
MADE IN AMERICA™

Southwire™ | TOOLS & EQUIPMENT

COMPACT CHESTS

CC482423

- Double lock system with one-time lock installation
- Caster-ready 7-gauge steel skids to accommodate optional casters
- Heavy-duty 16-gauge steel construction with fully arc-welded seams
- Four-way skids allow access from any side, making it easier and faster to transport
- Built-in tool tray
- Powder-coat finish for superior durability and corrosion resistance
- Recessed handles for positive gripping even with gloves on
- 48" Width x 24" Depth x 22.5" Height
- Casters shown are sold separately

We've got it
MADE IN AMERICA™

CC191932

- Caster-ready 14-gauge steel skids
- Recessed lock housing for protection against theft with one-time lock installation
- Four-way skids allow access from any side, making it easier and faster to transport
- Powder-coat finish for superior durability and corrosion resistance
- Heavy duty hinges to resist break-in
- Heavy-duty 16-gauge box construction
- 19″ Width x 44″ Depth x 19″ Height

We've got it
MADE IN AMERICA™

SPECIALTY BOXES

We've got it
MADE IN AMERICA™

F0604482

- Single recessed lock system for protection and easy access
- Thicker 14-gauge steel bottom provides enhanced structural rigidity, durability and strength, minimizing the possibility of fork lift damage during transport
- Four-way skids allow access from any side for easier and faster transport
- Adjustable and removable split shelves let you organize your storage down below
- Powder-coat finish for superior durability and corrosion resistance
- Dual gas springs for smooth, one-handed lift; one spring locks securely in place
- 60" Width x 44" Depth x 82" Height
- Casters shown are sold separately

We've got it
MADE IN AMERICA™

CB603065

- Load capacity 1,200 lbs. evenly distributed
- Shelves are 14 in. deep with a 1 in. hemmed lip
- 16-gauge fully arc-welded steel construction
- Powder-coat finish for superior durability and corrosion resistance
- Opens to 12" Width x 14" Depth x 65" Height
- Caster included

We've got it
MADE IN AMERICA™

CB602460

- Vertical storage area features a bracket for hanging extension cords, clothing or tool belts
- Four-way skids allow access from any side, making it easier and faster to transport
- Powder-coat finish for superior durability and corrosion resistance
- 60" Width x 24" Depth x 60" Height
- Casters shown are sold separately

STOR MAC SECURITY STORAGE CHESTS

- Tough steel wire mesh
-
- Four 6" heavy duty casters (standard)
- For high visibility storage
- Reinforced frame & door
- Removable shelves
- Lockable doors
- Load capacity 1,500 lbs
- Competitively priced

Two point locking doors use Master Lock No. 5.

HIGH VISIBILTY STORAGE

STOR MAC 60

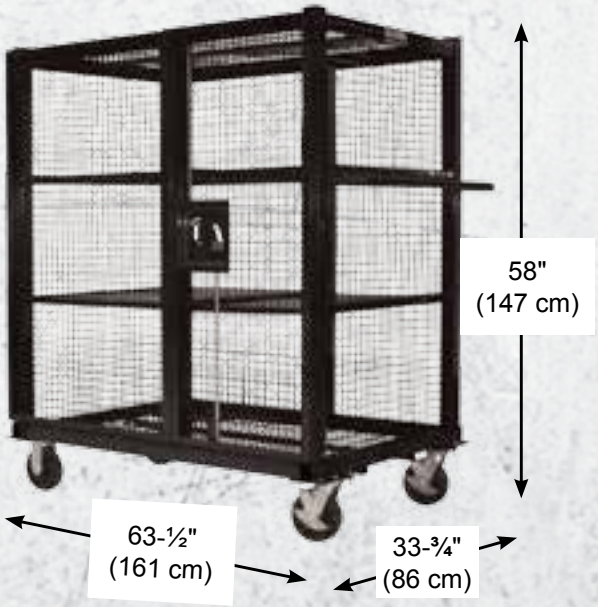

STOR MAC 48

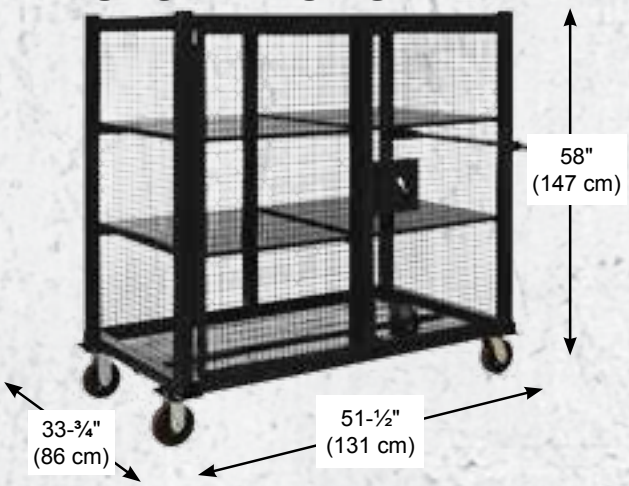

STOR MAC 30

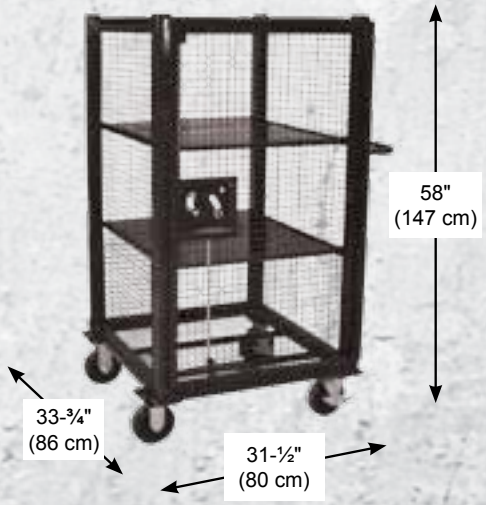

CE

WELDBOX

THE IDEAL STORAGE CHEST FOR ALL WELDERS & ELECTRICIANS

- Two-point latching system requires only one lock (WeldBox 3617)
- Weld Box 3617 is caster ready
- 16-gauge steel construction (WeldBox 3617, WeldBox 2812)
- Powder-coat finish for superior durability and corrosion resistance

WB2008
779910

WB2812
779911

WB3617
779928

Southwire™ | TOOLS & EQUIPMENT

JOBSITE INVENTORY MANAGEMENT CARTS

- Multiple adjustable shelves
- 6" durable non-marking hard casters for easy mobility
- Top and bottom locking bars for added security
- Powder-coat finish for superior durability and corrosion resistance
- Welded fork tubes for fast and easy transportation
- Quick access to commonly used items with external bin storage brackets
- Wide opening doors for easy access to materials
- Reinforced hinges for added security
- Hoistable from attached lifting points for movement to elevated jobsites

We've got it
MADE IN AMERICA™

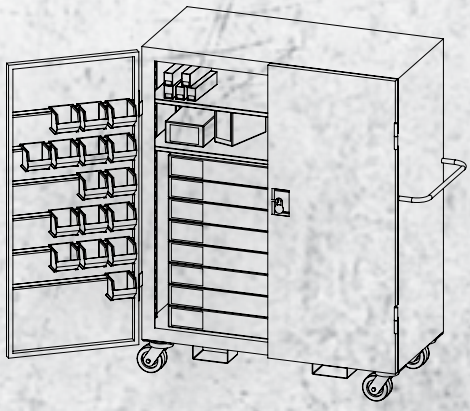

JSIM2D

- 2-Door solid metal construction

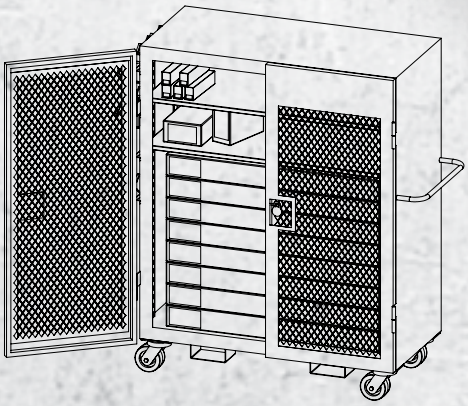

JSIM2DEX

- 2-Door mesh construction

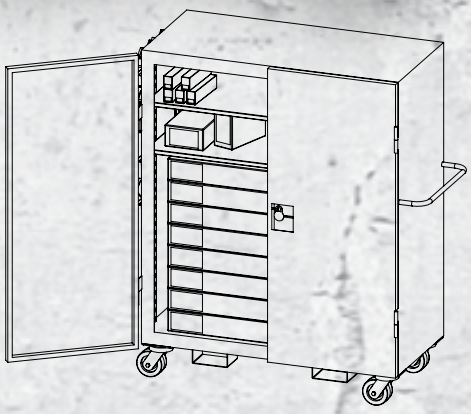

JSIM4D

- 4-Door inventory management cart

CADDY MAC 1

TRANSPORTS SPOOLS ON SPINDLES AND WORKS AS A DOLLY. WIRE IS DISPENSED WHILE LAYING FLAT

- 1/2" solid spindles are attached to cart.
- No loose pieces. Spindles lock into place, even during transport.
- Spindles swing out to set position for convenient loading of wire spools.

783463

CADDY MAC 2

THE IDEAL STORAGE CHEST FOR ALL WELDERS & ELECTRICIANS

- Spindles can be easily removed for the occasional use of larger spools.
- Inner spindles store in special loops which can hold four pieces and will not fall out during transportation.
- Hinge design allows easy access to all spools for wire dispensing and folds for compact storage.

783465

CADDY MAC 3

CADDY MAC 3 IS A VERSATILE WIRE CART THAT DOUBLES AS A DOLLY.

- Uses five 5/8" diameter spindles
- Unique spindle locking system, no loose clips
- Storage loops retain up to 5 spindles
- Dual wire guides
- Large spool capacity

783400

10-PACK MAC

FEED HANDLE AND GUIDE LOOPS ARE BUILT INTO ONE PART

- Handle/guide loop position controlled by plunger: 4-positions, no loose parts
- Spindles fold up & lock
- Mast swivels 360°, but can be locked in fixed positions
- Mast may be removed for compact storage
- 4-heavy duty, locking 8" swivel casters
- Travels through a 36" doorway

783366

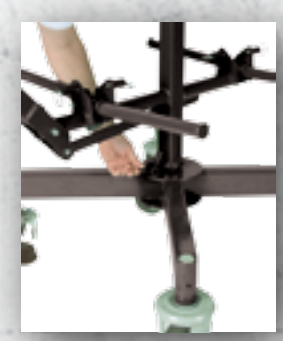

6-PACK MAC

REEL SPINDLES FOLD AND LOCK FOR CONVENIENT STORAGE

- Stores in one-third of the space of conventional dispensers
- Reel spindles fold and lock for convenient storage
- Fits through a 30" doorway
- Two 10" wheels with one 8" locking swivel caster for easy maneuverability
- Welded wire guides for easy payoff
- Stores up to (6) 2,500' spools (18" diameter) of wire

783350

SPOOL MAC

- All steel frame construction
- 10" wheels for easy transport over rough terrain
- Rollers on spool arm allow for smooth reel rotation and easy payoff
- No loose pieces to account for
- Folding design allows for compact storage
- Fits through 32" doorways
- 350lbs (160 kg) load capacity

783444

HANDI MAC

ALL STEEL FRAME CONSTRUCTION

- Provides extra spool storage for Caddy Mac 1 or as a free standing wire dispenser
- Holds up to 8 additional spools
- Spindles are made of sturdy 3/8" steel bar

783490

Southwire™ | TOOLS & EQUIPMENT

TAINER MAC STACKING CONTAINERS

A MOBILE, HEAVY-DUTY STACKING CONTAINER

- Transports 1,500 lbs. / 680 kg of material
- Large storage capacity
- Four 6" heavy-duty lockable casters
- Posts for stacking & steering
- Stacks with other Sumner Stacking Macs
- Fits through 36" (91 cm) doorway

Stacking saves valuable floor space while still allowing access to the bottom container.

784990

24" x 56" x 32

784986

PERFECT STORAGE FOR:

- Power Cords
- Fittings
- Fasteners
- Safety Gear
- Hardware
- Loose Parts
- Pumps & Hoses
- Pulling Ropes and More!

784958

KNOCKDOWN MAC STACKING CONTAINERS

THE "KNOCKDOWN" VERSION OF SUMNER'S TAINER MAC™

- Transports 1,500 lbs. / 680 kg of material
- Breaks down for easy storage
- Large storage capacity
- Four 6" heavy-duty lockable casters
- Posts for stacking & steering
- Fits through 36" (91 cm) doorway

784987

784986

784985

WIRE WAGON® 550

MOBILE PRINT TABLE AND WORK STATION

- Full-tilt table which allows for ease in plan review
- 8″ Eco-rubber tires
- 1,000 lb Capacity for strut or conduit
- Multiple heavy-duty shelves for holding tools and materials

We've got it
MADE IN AMERICA™

568255

WIRE WAGON® 520

MC CABLE CART

- Comes standard with two sets of axles for wider than normal spools
- 8" Eco-rubber tires
- Can carry up to 2,000lbs of conduit or strut
- Holds 4-spools of 1000' MC cable

We've got it
MADE IN AMERICA™

568250

WIRE WAGON® 510

XL CONDUIT & WIRE CART

- Holds several hundred feet of conduit and more
- Full-use work surface
- 8" Eco-rubber tires
- Holds up to 14-2,500' spools or a combination of 2,500' and 500' spools 10, 12 and 14AWG

We've got it
MADE IN AMERICA™

568248

WIRE WAGON® 535

LARGE CAPACITY WIRE CART

- Holds up to 20-500′ spools of 12AWG and 14WAG or 6-2,500′ spools of 12WAG and 14WAG
- T-handles and heavy-duty casters for easy of movement around the jobsite
- Extra storage shelf for tools, spools and materials
- 8″ Eco-rubber tires

We've got it
MADE IN AMERICA™

568252

We've got it
MADE IN AMERICA™

568251

WIRE WAGON® 530

LARGE SPOOL CART

- Designed for ease or operation
- Holds 8-spools up to 16″ in diameter
- Storage for extra tools, spools and materials
- 8″ Eco-rubber tires

WIRE WAGON® 538

SERVICE CART

- Holds up to 12-500′ spools of 12AWG and 14AWG
- Constructed with 5/8″ solid steel bar to support almost any combination of wire spools
- Lightweight and easy to move around the jobsite

We've got it
MADE IN AMERICA™

568254

PIANO BOXES

Model #	Stock #	Description		
PB603034	59822201	PB603034 Piano Box		
Height		Width	Depth	CU-FT
34"		60"	30"	35.4'

Model #	Stock #	Description		
PB483048	59822301	PB483048 Piano Box		
Height		Width	Depth	CU-FT
48"		48"	30"	26.6'

Model #	Stock #	Description		
PB603049	59822401	PB603049 Piano Box		
Height		Width	Depth	CU-FT
48.5"		60"	30"	50.5'

CLAMSHELL CABINET

Model #	Stock #	Description		
CB603065	59822701	CB603065 Bi-Fold Cabinet		
Height		Width	Depth	CU-FT
65"		120"	14"	68.4'

STORAGE CABINET

Model #	Stock #	Description		
CB602460	59822801	CB602460 Two Door Cabinet		
Height		Width	Depth	CU-FT
60"		60"	24"	50'

COMPACT CHEST

Model #	Stock #	Description		
CC482423	59822601	59822601 Compact Chest		
Height		Width	Depth	CU-FT
22.5"		48"	24"	15'

MINI COMPACT CHEST

Model #	Stock #	Description		
CC191932	63036001	CC191932 Mini Compact Chest		
Height		Width	Depth	Weight
19"		19"	44"	73 lbs.

FIELD OFFICE

Model #	Stock #	Description		
F0604482	59822501	F0604482 Field Office		
Height		Width	Depth	Weight
82"		60"	44"	122.4 lbs.

JIM BOXES

Model #	Stock #	Description		
JSIM2D	630359	Job Site Inventory Management Cart Sheet Metal Construction		
Height		Width	Depth	Weight
"70		60"	30"	754 lbs.

Model #	Stock #	Description		
JSIM2DEX	630358	Job Site Inventory Management Cart Expanded Steel Construction		
Height		Width	Depth	Weight
"70		60"	30"	754 lbs.

Model #	Stock #	Description		
JSIM4D	631478	4 Door Job Site Inventory Management Cart		
Height		Width	Depth	Weight
"70		60"	30"	754 lbs.

WELD BOXES

Model #	Stock #	Description		
WB2008	779910	WELDBOX 2008		
Height		Width	Depth	Weight
9.5"		20.125"	8.5"	12.1 lbs.

Model #	Stock #	Description		
WB2812	779911	WELDBOX 2812		
Height		Width	Depth	Weight
11"		28.375"	12"	30.8 lbs.

Model #	Stock #	Description		
WB3617	779928	WELDBOX 3617		
Height		Width	Depth	Weight
22.5"		36"	17"	97.9 lbs.

STORMAC

Model #	Stock #	Description		
SM30	784920	Stor Mac Security Storage Chest 30		
Height		Width	Depth	Weight
58"		31.5"	33.75"	210 lbs.

Model #	Stock #	Description		
SM48	785921	Stor Mac Security Storage Chest 48		
Height		Width	Depth	Weight
58"		51.5"	33.75”	310 lbs.

Model #	Stock #	Description		
SM60	785920	Stor Mac Security Storage Chest 60		
Height		Width	Depth	Weight
58"		63.5"	33.75”	345 lbs.

WIRE WAGONS®

Model #	Stock #	Description		
WW510	568248	Wire Wagon® 510 - XL Conduit & Wire Cart		
Height		Width	Length	Weight
46.25"		29.5"	60.5"	191 Lbs.

Model #	Stock #	Description		
WW520	568250	Wire Wagon® 520 - MC cable cart - holds 4 1000' spools		
Height		Width	Length	Weight
32"		52"	60"	125 Lbs.

Model #	Stock #	Description		
WW530	568251	Wire Wagon® 530 - Large Spool Wire Cart		
Height		Width	Length	Weight
42"		29.5"	50"	155 Lbs

Model #	Stock #	Description		
WW535	568252	Wire Wagon® 535 - Large Capacity Wire Cart		
Height		Width	Length	Weight
42"		29.5"	50"	142 Lbs

Model #	Stock #	Description		
WW538	568254	Wire Wagon® 538 - Service Cart		
Height		Width	Length	Weight
36.5		26.5"	32.5"	25.5 Lbs

Model #	Stock #	Description		
WW550	568255	Wire Wagon® 550 - Mobile print table w/ storage		
Height		Width	Length	Weight
42"		32"	54"	180 Lbs.

Southwire™ | TOOLS & EQUIPMENT

MATERIAL HANDLING

BUILT FOR DURABILITY.
BUILT FOR RELIABILITY.
BUILT FOR WORK.™

1-855-798-6657 | SOUTHWIRETOOLS.COM

©2017 Southwire Company, LLC. All rights reserved.
®Registered Trademark and ™Trademark of Southwire Company, LLC.