THIS COPY IS PROVIDED ON A RESTRICTED BASIS AND IS NOT TO BE USED IN ANY WAY DETRIMENTAL TO THE INTERESTS OF PANDUIT CORP.

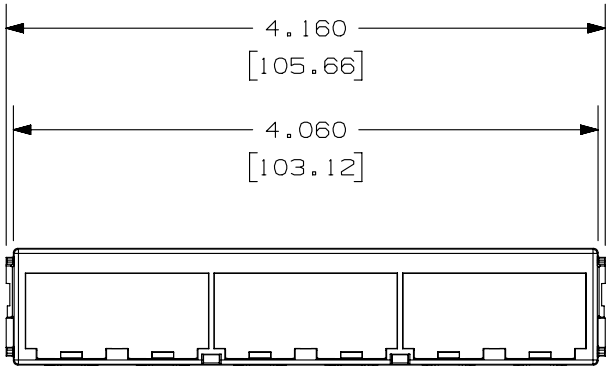

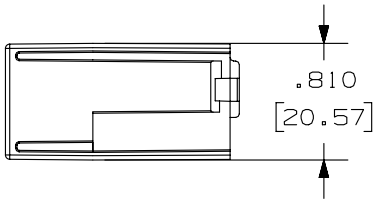

PANDUIT PART NUMBER	WEIGHT (APPOX.)
QPPABL	0.06 lbs (3.2 g)

NOTES:
1. SEE CURRENT CATALOG FOR VARIOUS APPLICATIONS.
2. THE ADAPTER IS DESIGNED FOR USE WITH QUICKET PATCH PANELS.
3. DIMENSIONS IN BRACKETS ARE IN METRIC.

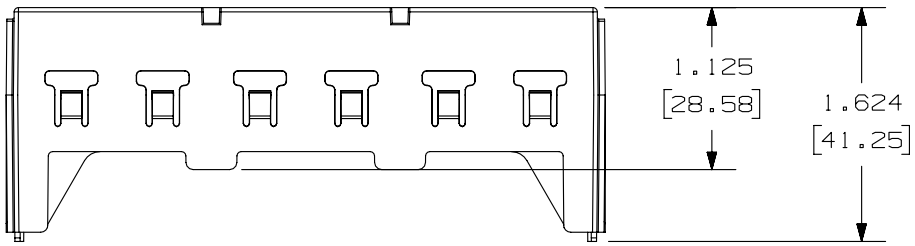

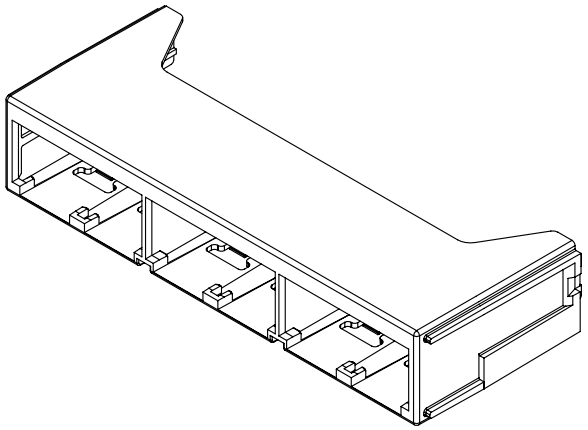

PART NUMBER: QPPABL

TITLE: MINI-COM 6 POSITION QUICKNET PATCH PANEL ADPATER

CUSTOMER DRAWING

ITEM REVISION NAME: M02582BE/09

DATASET FILE NAME: M02582BE_DC36/08B

UNLESS OTHERWISE SPECIFIED, DIMENSIONAL TOLERANCES ARE: IN [mm]

.X ± .XXX ± .010 [.3]

.XX ± .03[.8] ANGLES ±

THIRD ANGLE PROJECTION

MATERIAL: ABS

DRAWING NUMBER: 02582-36

DRAWN BY	DATE	CHK	SCALE	SHT 1 OF 1	SIZE
KSM	1-03-07	WFMI	NONE		A

REV	DATE	BY	CHK	APR	DESCRIPTION	ECN
2	5/23/14	JSP	REFR	TMBA	REVISED AND REDRAWN, PREVIOUS REVISIONS HAVE BEEN OMITTED.	02582-36

D10100DA/14