THIS COPY IS PROVIDED ON A RESTRICTED BASIS AND IS NOT TO BE USED IN ANY WAY DETRIMENTAL TO THE INTERESTS OF PANDUIT CORP.

PANDUIT PART NO.	LENGTH	WEIGHT
LDPH3**6-A	72.00 ±.18 [1828.8 ±4.6]	.04 LBS/FT [.19 g/mm]
LDPH3**8-A	96.00 ±.18 [2438.4 ±4.6]	
LDPH3**10-A	120.00 ±.18 [3048.0 ±4.6]	
LDPH3**2-A	78.74 ±.18 [2000.0 ±4.6]	

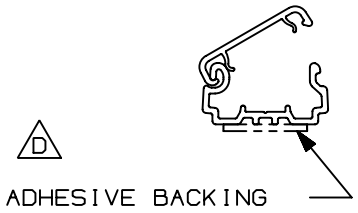

LDPH3 OPEN POSITION

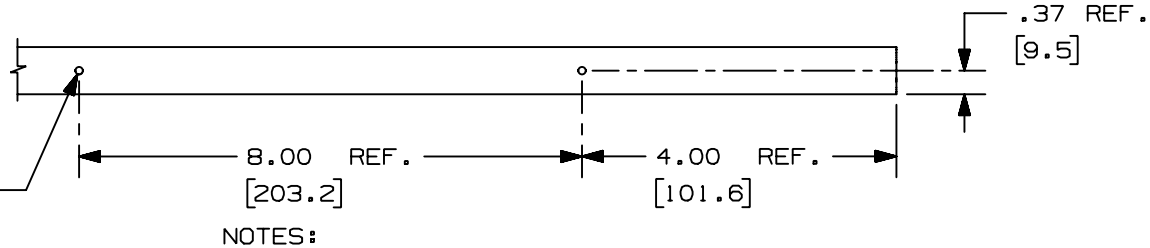

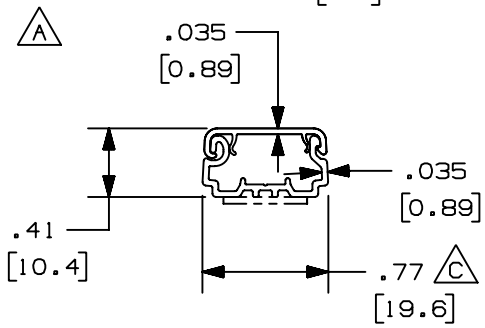

LDPH3 CLOSED POSITION

NOTES:
1. SEE CURRENT CATALOG FOR ADDITIONAL PART NUMBER SUFFIXES TO INDICATE COLORS AND/OR PACKAGE QUANTITY.
2. PART IS DESIGNED TO SUPPORT MAXIMUM WEIGHT ON A CLEAN, DRY, SMOOTH SURFACE. THE SURFACE MUST BE PROPERLY PREPARED IN ACCORDANCE WITH PANDUIT RECOMMENDATIONS.
3. TO APPLY PART (ADHESIVE BACKING INSTALLATION ONLY):
   a. REMOVE PROTECTIVE FILM
   b. PLACE PART IN DESIRE LOCATION
   c. APPLY PRESSURE TO FLAT SURFACE ON RACEWAY
4. DIMENSIONS IN PARENTHESES ARE IN METRIC.
5. NO WARRANTY, EXPRESSED OR IMPLIED, IS MADE BY PANDUIT WITH RESPECT TO ADHESIVE BOND PERFORMANCE. THE CONDITIONS UNDER WHICH THESE RACEWAYS MAY BE APPLIED AND/OR THE SURFACE TO WHICH THEY MAY BE APPLIED ARE BEYOND PANDUIT'S CONTROL.

E

REV	DATE	BY	CHK	DESCRIPTION	ECN	CHK	CUST	SUP
-	--------	---	---	RELEASED TO PRODUCTION	--------	----	----	
-	--------	---	---	F. REVISED PART DESCRIPTION IN TITLE BLOCK E. REVISED NOTES: #2 AND #3	--------	----	----	
2	04-15-05	JBN	BKR	D. REVISED NOTATION C. REVISED DIMENSION: .077 WAS .075	38737-14	RGRO	RGRO	
1	02-24-05	JBN	BKR	B. REVISED CAD FILE NAME A. REVISED BASE AND COVER GEOMETRY				
R	09-22-04	JBN	BKR	DRAWING RELEASED				

CAD FILENAME/LAYERS B D38737B0_DC_LDPH3_01B.PRT

PANDUIT CORP. TINLEY PARK, ILLINOIS

F HINGED LDPH3 RACEWAY (LDPH3) CUSTOMER DRAWING

UNLESS OTHERWISE SPECIFIED, DIMENSIONAL TOLERANCES ARE:
(.X) ± (.XXX) ±.010[.25]
(.XX) ±.03[.8] ANGLES ±

UNLESS OTHERWISE SPECIFIED, ALL DIMENSIONS ARE GIVEN IN INCHES, THIRD ANGLE PROJECTION.

DRAWN BY JBN
DATE 09-22-04
CHK'D BKR
MAT'L: PVC
SCALE NONE
DRAWING NO. 38737-14
DWG SIZE A