THIS COPY IS PROVIDED ON A RESTRICTED BASIS AND IS NOT TO BE USED IN ANY WAY DETRIMENTAL TO THE INTERESTS OF PANDUIT CORP.

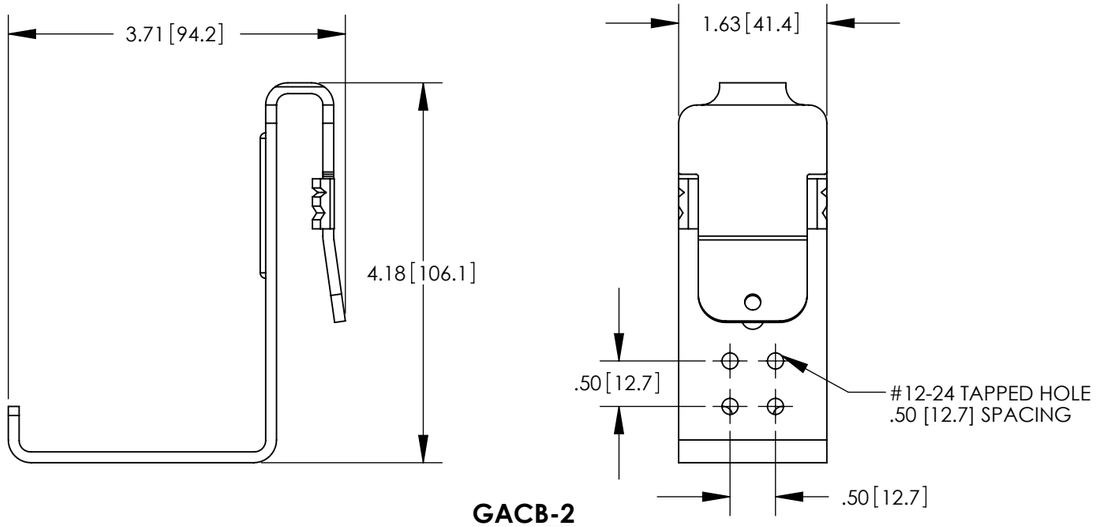

GACB-2

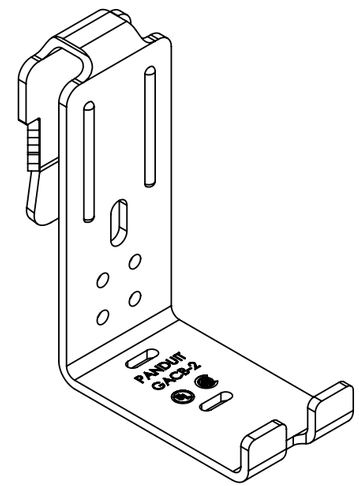

GACB-2

NOTES

1. MATERIAL: 0.12 [3.0] THICK STEEL, ZINC PLATED
2. UL LISTED 467 FOR GROUNDING AND BONDING
3. CSA CERTIFIED 22.2
4. COMPATIBLE WITH PANDUIT Wyr-Grid &1-1/2" & 2" SIDE CHANNEL LADDER RACK.
5. DIMENSIONS IN INCHES. DIMENSIONS IN BRACKETS ARE MILLIMETERS

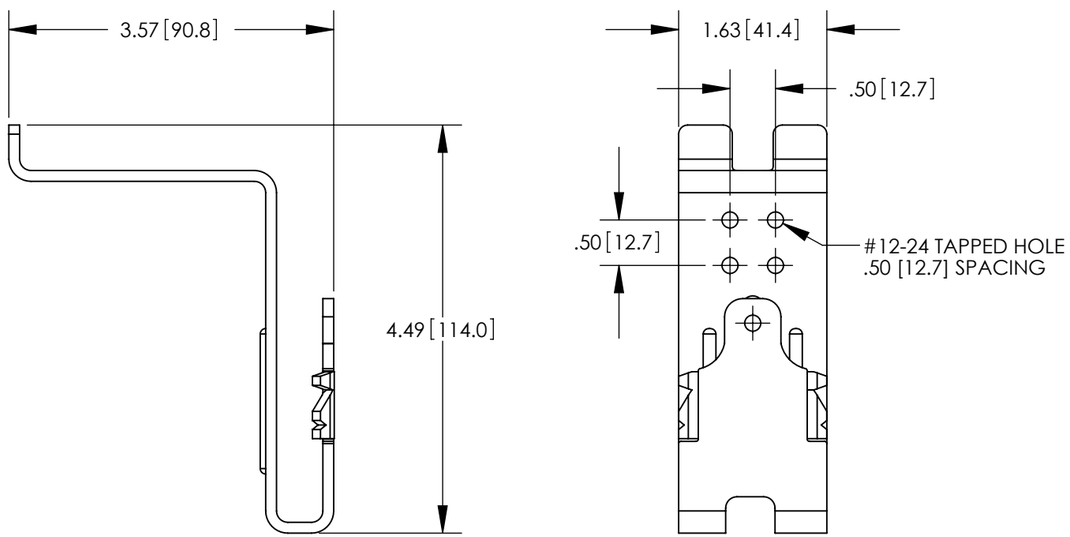

GACB-3

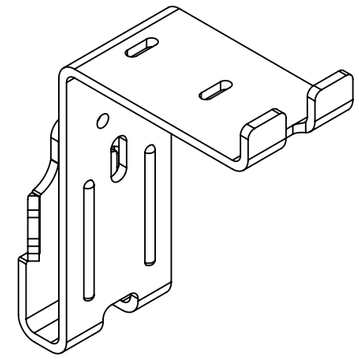

GACB-3

REV	DATE	BY	CHK	DESCRIPTION	ECN	-R	SUP
00	9/11	JHNU	RGB	RELEASED TO PRODUCTION	10D013BN-DC	RGB	RGB

PANDUIT CORP. TINLEY PARK, ILLINOIS

GROUND AUXILIARY CABLE BRACKET
(GACB-2, GACB-3)
CUSTOMER DRAWING

UNLESS OTHERWISE SPECIFIED DIMENSIONAL TOLERANCES ARE:
(.X) ± (.XXX) ±
(.XX) ± ANGLES ±

UNLESS OTHERWISE SPECIFIED, ALL DIMENSIONS ARE GIVEN IN INCHES, THIRD ANGLE PROJECTION

DRAWN BY JHNU
MAT'L:
SCALE NONE
DATE 3/11
CHK'D
DRAWING NO / CAD FILE 10D013BN-DC
DWG B SIZE