THIS COPY IS PROVIDED ON A RESTRICTED BASIS AND IS NOT TO BE USED IN ANY WAY DETRIMENTAL TO THE INTERESTS OF PANDUIT CORP.

NOTES:
1. FLEX-OPTI-1RU CAN HOLD UP TO TWO HD FLEX CASSETTES, AND CAN BE ATTACHED TO OPTICOM PATCH PANELS OR ENCLOSURES, EXCLUDING ANGLED OPTICOM PATCH PANELS AND ENCLOSURES.
2. VISIT OUR ON-LINE CATALOG AT WWW.PANDUIT.COM FOR A LIST OF CURRENT PARTS APPLICABLE FOR USE WITH THIS PRODUCT.
3. DIMENSIONS IN [ ] ARE METRIC.
4. ALL MATERIALS AND COMPONENTS USED MEET THE MATERIAL RESTRICTIONS OF RoHS (EUROPEAN DIRECTIVE 2011/65/EU ON THE RESTRICTION OF HAZARDOUS SUBSTANCES) AS PROPOSED BY THE RoHS TECHNICAL ADAPTATION COMMITEE.

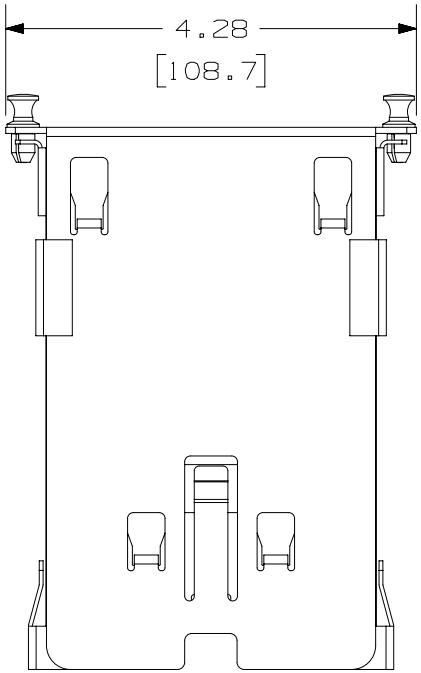

TOP VIEW

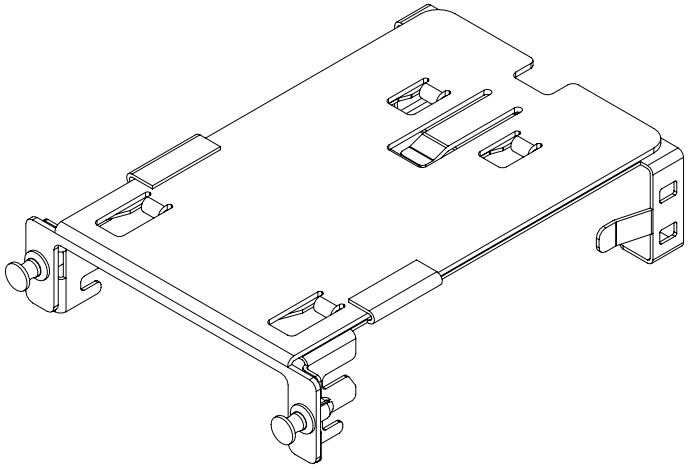

ISO VIEW

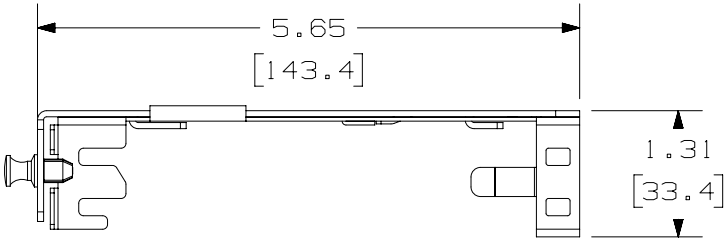

SIDE VIEW

REV	DATE	BY	CHK	APR	DESCRIPTION	ECN
00	03/20/18	SAT	BJBE	AW	INITIAL RELEASE	00076EAD-DC

PART NUMBER: FLEX-OPTI-1RU

TITLE: HD FLEX TO OPTICOM CONVERTER BRACKET - 1RU

CUSTOMER DRAWING

ITEM REVISION NAME: 00076EAD/00

DATASET FILE NAME: 00076EAD_DC/00A

THIRD ANGLE PROJECTION

PANDUIT

MATERIAL: 20 Ga and 16 Ga Steel

DRAWING NUMBER: 00076EAD-DC

DRAWN BY	DATE	CHK	SCALE	SHEET	SIZE
SAT	03/20/2018	BJBE	1:2	SHEET 1 OF 1	A

A-SIZE CUSTOMER