OD9225 Sealed Sleeve Series

DC Fans - 12, 24V
92mm x 25mm (3.6" x 1.0")

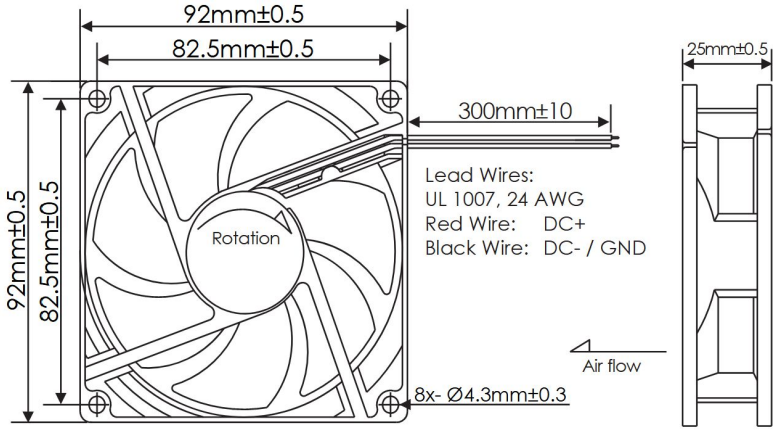

Frame	PBT, UL94 V-0 Plastic
Impeller	PBT, UL94 V-0 Plastic
Connection	2x Lead Wires, 24 AWG
Motor	Brushless DC, Auto Cutoff, Auto Restart, Polarity Protected, Electronically Protected
Bearing System	Sealed Sleeve Bearings
Dielectric Strength	500VAC/min, < 1mA
Insulation Resistance	≥10M Ohm @ 500 VDC

Operating Temperature
-20°C ~ +65°C

Storage Temperature
-20°C ~ +75°C

Life Expectancy
50,000 Hours (L10 at 40°C)

Available Options
Tachometer Output
Alarm Output
PWM Speed Control Input
IP Ratings

Weight: 0.18 lbs

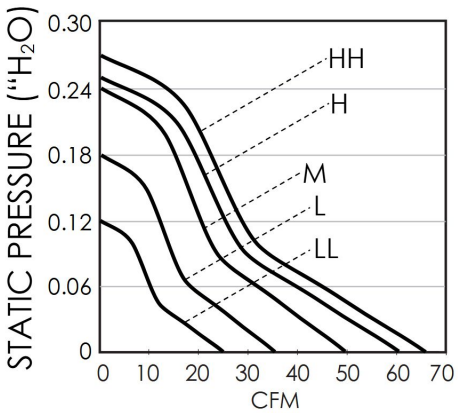

Part Number	Rated Voltage (Volts DC)	Voltage Range (Volts DC)	Input Power (Watts)	Rated Current (Amps)	Rated Speed (RPM)	Airflow (CFM)	Noise Level (dBA)	Max. Static Pressure ("H_2O)
OD9225-12HSS	12	8 ~ 13.8	3.0	0.29	3325	60.2	38	0.25"
OD9225-24HSS	24	15 ~ 26.4	3.5	0.18	3325	60.2	38	0.25"

Knight Electronics, Inc.
10557 Metric Drive
Dallas, TX 75243
214-340-0265

Revised 3/18/2022
m0

Orion Fans
Information and data is subject to change without prior notification