FLUKE®

27 II/28 II

Digital Multimeters

Users Manual

September 2009, Rev. 1, 10/10
© 2009, 2010 Fluke Corporation. All rights reserved. Specifications are subject to change without notice.
All product names are trademarks of their respective companies.

Lifetime Limited Warranty

Each Fluke 20, 70, 80, 170, 180 and 280 Series DMM will be free from defects in material and workmanship for its lifetime. As used herein, “lifetime” is defined as seven years after Fluke discontinues manufacturing the product, but the warranty period shall be at least ten years from the date of purchase. This warranty does not cover fuses, disposable batteries, damage from neglect, misuse, contamination, alteration, accident or abnormal conditions of operation or handling, including failures caused by use outside of the product’s specifications, or normal wear and tear of mechanical components. This warranty covers the original purchaser only and is not transferable.
For ten years from the date of purchase, this warranty also covers the LCD. Thereafter, for the lifetime of the DMM, Fluke will replace the LCD for a fee based on then current component acquisition costs.
To establish original ownership and prove date of purchase, please complete and return the registration card accompanying the product, or register your product on http://www.fluke.com. Fluke will, at its option, repair at no charge, replace or refund the purchase price of a defective product purchased through a Fluke authorized sales outlet and at the applicable international price. Fluke reserves the right to charge for importation costs of repair/replacement parts if the product purchased in one country is sent for repair elsewhere.
If the product is defective, contact your nearest Fluke authorized service center to obtain return authorization information, then send the product to that service center, with a description of the difficulty, postage and insurance prepaid (FOB Destination). Fluke assumes no risk for damage in transit. Fluke will pay return transportation for product repaired or replaced in-warranty. Before making any non-warranty repair, Fluke will estimate cost and obtain authorization, then invoice you for repair and return transportation.

THIS WARRANTY IS YOUR ONLY REMEDY. NO OTHER WARRANTIES, SUCH AS FITNESS FOR A PARTICULAR PURPOSE, ARE EXPRESSED OR IMPLIED. FLUKE SHALL NOT BE LIABLE FOR ANY SPECIAL, INDIRECT, INCIDENTAL OR CONSEQUENTIAL DAMAGES OR LOSSES, INCLUDING LOSS OF DATA, ARISING FROM ANY CAUSE OR THEORY. AUTHORIZED RESELLERS ARE NOT AUTHORIZED TO EXTEND ANY DIFFERENT WARRANTY ON FLUKE’S BEHALF. Since some states do not allow the exclusion or limitation of an implied warranty or of incidental or consequential damages, this limitation of liability may not apply to you. If any provision of this warranty is held invalid or unenforceable by a court or other decision-maker of competent jurisdiction, such holding will not affect the validity or enforceability of any other provision.

Fluke Corporation
P.O. Box 9090
Everett, WA 98206-9090
U.S.A.

Fluke Europe B.V.
P.O. Box 1186
5602 BD Eindhoven
The Netherlands

5/07

Table of Contents

Title	Page
Introduction	1
How to Contact Fluke	1
Safety Information	2
Features	6
Automatic Power-Off	13
Input Alert™ Feature	13
Power-Up Options	13
How to Make Measurements	15
AC and DC Voltage Measurements	15
Zero Input Behavior of True-rms Meters (28 II)	16
Low-Pass Filter (28 II)	16
Temperature Measurements (28 II)	17
Continuity Tests	18
Resistance Measurements	20
How to Use Conductance for High Resistance or Leakage Tests	22

Capacitance Measurements 23
Diode Tests 24
AC or DC Current Measurements 26
Frequency Measurements 29
Duty Cycle Measurements 31
How to Determine Pulse Width 32
Bargraph 32
Zoom Mode (Power Up Option Only) 33
Uses for the Zoom Mode 33
HiRes Mode (28 II) 33
MIN MAX Recording Mode 34
Smooth Feature (Power Up Option Only) 34
AutoHOLD Mode 36
Relative Mode 36
Maintenance 37
General Maintenance 37
Fuse Test 37
How to Replace the Batteries 38
How to Replace the Fuses 39
Service and Parts 39
General Specifications 44
Detailed Specifications 46
27 II AC Voltage 46
28 II AC Voltage 47
DC Voltage, Conductance, and Resistance 48
Temperature (28 II Only) 49
AC Current 49
DC Current 50
Capacitance 50

Diode 51
Frequency 51
Frequency Counter Sensitivity and Trigger Levels 51
Duty Cycle (Vdc and mVdc) 52
Input Characteristics 52
MIN MAX Recording 53

List of Tables

Table	Title	Page
1.	Symbols	5
2.	Inputs	6
3.	Rotary Switch Positions	7
4.	Pushbuttons	8
5.	Display Features	11
6.	Power-Up Options	14
7.	Functions and Trigger Levels for Frequency Measurements	30
8.	MIN MAX Functions	35
9.	Replacement Parts	41
10.	Accessories	43

List of Figures

Figure	Title	Page
1.	Display Features	11
2.	AC and DC Voltage Measurements	15
3.	Low-Pass Filter	17
4.	Continuity Tests	19
5.	Resistance Measurements	21
6.	Capacitance Measurements	23
7.	Diode Tests	25
8.	Current Measurements	27
9.	Components of Duty Cycle Measurements	31
10.	Current Fuse Test	38
11.	Battery and Fuse Replacement	40
12.	Replacement Parts	42

Introduction

⚠⚠ Warning

Read “Safety Information” before using the Meter.

Except where noted, the descriptions and instructions in this manual refer to both Series II Models 27 and 28 multimeters (hereafter referred to as “the Meter”). Model 28 II appears in all illustrations.

The Model 27 II is an average-responding Digital Multimeter while the 28 II is a True-rms Digital Multimeter. In addition the 28 II measures temperature using a type-K thermocouple.

How to Contact Fluke

To contact Fluke, call one of the following telephone numbers:

Technical Support USA: 1-800-44-FLUKE (1-800-443-5853)

Calibration/Repair USA: 1-888-99-FLUKE (1-888-993-5853)

Canada: 1-800-36-FLUKE (1-800-363-5853)

Europe: +31 402-675-200

Japan: +81-3-3434-0181

Singapore: +65-738-5655

Anywhere in the world: +1-425-446-5500

Or, visit Fluke's website at www.fluke.com.

To register your product, visit http://register.fluke.com.

To view, print, or download the latest manual supplement, visit http://us.fluke.com/usen/support/manuals.

Safety Information

The Meter complies with:

- ISA-82.02.01
- CAN/CSA-C22.2 No. 61010-1-04
- IEC Standard No. 61010-1:2001
- Measurement Category III, 1000V, Pollution Degree 2
- Measurement Category IV, 600V, Pollution Degree 2

In this manual, a **Warning** identifies conditions and actions that pose hazards to the user. A **Caution** identifies conditions and actions that may damage the Meter or the equipment under test.

Symbols used on the Meter and in this manual are explained in Table 1.

⚠⚠Warning

To avoid possible electric shock or personal injury, follow these guidelines:

- **Use this Meter only as specified in this manual or the protection provided by the Meter might be impaired.**
- **Do not use the Meter if it is damaged. Before you use the Meter, inspect the case. Look for cracks or missing plastic. Pay particular attention to the insulation surrounding the connectors.**
- **Make sure the battery door is closed and secured before operating the Meter.**
- **Replace the battery as soon as the battery indicator (▬) appears.**
- **Remove test leads from the Meter before opening the battery door.**

- **Inspect the test leads for damaged insulation or exposed metal. Check the test leads for continuity. Replace damaged test leads before you use the Meter.**
- **Do not apply more than the rated voltage, as marked on the Meter, between the terminals or between any terminal and earth ground.**
- **Never operate the Meter with the cover removed or the case open.**
- **Use caution when working with voltages above 30 V ac rms, 42 V ac peak, or 60 V dc. These voltages pose a shock hazard.**
- **Use only the replacement fuses specified by the manual.**
- **Use the proper terminals, function, and range for measurements.**
- **Avoid working alone.**
- **When measuring current, turn off circuit power before connecting the Meter in the circuit. Remember to place the Meter in series with the circuit.**
- **When making electrical connections, connect the common test lead before connecting the live test lead; when disconnecting, disconnect the live test lead before disconnecting the common test lead.**
- **Do not use the Meter if it operates abnormally. Protection may be impaired. When in doubt, have the Meter serviced.**
- **Do not use the Meter around explosive gas, vapor or in damp or wet environments.**
- **Use only three 1.5-V AA batteries, properly installed in the Meter case, to power the Meter.**

- **When servicing the Meter, use only specified replacement parts.**
- **When using probes, keep fingers behind the finger guards on the probes.**
- **Do not use the Low-Pass Filter to verify the presence of hazardous voltages. Voltages greater than what is indicated may be present. First, make a voltage measurement without the filter to detect the possible presence of hazardous voltage. Then add the filter.**

The following three warnings apply to MSHA use.

- **MSHA approved for use with three Energizer P/N E91 or three Duracell P/N MN1500 1.5 volt, "AA" alkaline batteries only. All cells are to be replaced at the same time with identical part number cells in fresh air locations only.**
- **This multimeter is not to be used to check electrical blasting circuits.**
- **This multimeter is not to be connected to an electrically energized circuit in an area where permissibility is required.**

⚠Caution

To avoid possible damage to the Meter or to the equipment under test, follow these guidelines:

- **Disconnect circuit power and discharge all high-voltage capacitors before testing resistance, continuity, diodes, or capacitance.**
- **Use the proper terminals, function, and range for all measurements.**
- **Before measuring current, check the Meter's fuses. (See "Fuse Test".)**

Table 1. Symbols

~	AC (Alternating Current)	⏚	Earth ground
⎓	DC (Direct Current)	⏛	Fuse
⚠	Hazardous voltage	CE	Conforms to European Union directives.
⚠	Risk of Danger. Important information. See Manual.	SP C US	Conforms to relevant Canadian Standards Association directives.
▬	Battery. Low battery when displayed.	⧈	Double insulated
)))))	Continuity test or continuity beeper tone.	⊣⊢	Capacitance
CAT III	IEC Overvoltage Category III CAT III equipment is designed to protect against transients in equipment in fixed-equipment installations, such as distribution panels, feeders and short branch circuits, and lighting systems in large buildings.	CAT IV	IEC Overvoltage Category IV CAT IV equipment is designed to protect against transients from the primary supply level, such as an electricity meter or an overhead or underground utility service.
MSHA	United States Department of Labor, Mine Safety and Health Administration.	▶|	Diode
TÜV	Inspected and licensed by TÜV Product Services.	N10140	Conforms to relevant Australian standards.
	Do not dispose of this product as unsorted municipal waste. Go to Fluke's website for recycling information.		

Features

Tables 2 through 5 briefly describe the features of the Meter.

Table 2. Inputs

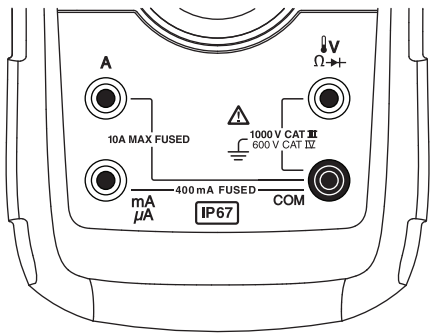

gaq112.eps

Terminal	Description
A	Input for 0 A to 10.00 A current (10 - 20 A overload for 30 seconds maximum), current frequency, and duty cycle measurements.
mA µA	Input for 0 µA to 400 mA current measurements (600 mA for 18 hrs) and current frequency and duty cycle.
COM	Return terminal for all measurements.
V Ω	Input for voltage, continuity, resistance, diode, capacitance, frequency, temperature (28 II only), and duty cycle measurements.

Table 3. Rotary Switch Positions

Switch Position	Function
Any Position	When the Meter is turned on, the Meter model number briefly appears on the display.
LO Ṽ	AC voltage measurement Press [ ] (yellow) for low-pass filter (LO) (28 II only)
V̄	DC voltage measurement
🌡 mV	600 mV dc voltage range
	Press [ ] (yellow) for temperature (🌡) (28 II only)
))))) Ω ⊣⊢	Press [ )))))] for continuity test. Ω Resistance measurement Press [ ] (yellow) for capacitance measurement.
⊣▶⊢	Diode test
mÃ A ⎓	AC current measurements from 0 mA to 10.00 A Press [ ] (yellow) for dc current measurements, from 0 mA to 10.00 A.
μÃ ⎓	AC current measurements from 0 μA to 6000 μA Press [ ] (yellow) for dc current measurements from 0 μA to 6000 μA.

Table 4. Pushbuttons

Button	Switch Position	Function
(Yellow)	Ω ⊣⊢	Selects capacitance
	mV	Selects temperature (28 II only)
	LO V	Selects ac low-pass filter function (28 II only)
	mA A	Switches between dc and ac current
	μA	Switches between dc and ac current
RANGE	Any switch position	Switches between the ranges available for the selected function. To return to autoranging, hold the button down for 1 second.
	mV	Switches between °C and °F. (28 II only)
AutoHOLD	Any switch position	AutoHOLD (formerly TouchHold) captures the present reading on the display. When a new, stable reading is detected, the Meter beeps and displays the new reading.
	MIN MAX recording	Stops and starts recording without erasing recorded values.
	Frequency counter	Stops and starts the frequency counter.

Table 4. Pushbuttons (cont.)

Button	Switch Position	Function
)))))	Continuity))))) Ω ⊣⊢ MIN MAX recording Hz, Duty Cycle	Turns the continuity beeper on and off Switches between Peak (250 µs) and Normal (100 ms) response times. (28 II only) Toggles the meter to trigger on positive or negative slope.
☼	Any switch position	Turns the button backlight and display backlight on, makes them brighter, and turns them off. For Model 28 II, hold ☼ down for one second to enter the HiRes digit mode. The “HiRes” icon appears on the display. To return to the 3-1/2 digit mode, hold ☼ down for one second. HiRes=19,999
MIN MAX	Any switch position	Starts recording of minimum and maximum values. Steps the display through MAX, MIN, AVG (average), and present readings. Cancels MIN MAX (hold for 1 second)

Table 4. Pushbuttons (cont.)

Button	Switch Position	Function
REL Δ (Relative mode)	Any switch position	Stores the present reading as a reference for subsequent readings. The display is zeroed, and the stored reading is subtracted from all subsequent readings.
Hz %	Any switch position except diode test	Press Hz % for frequency measurements. Starts the frequency counter. Press again to enter duty cycle mode.

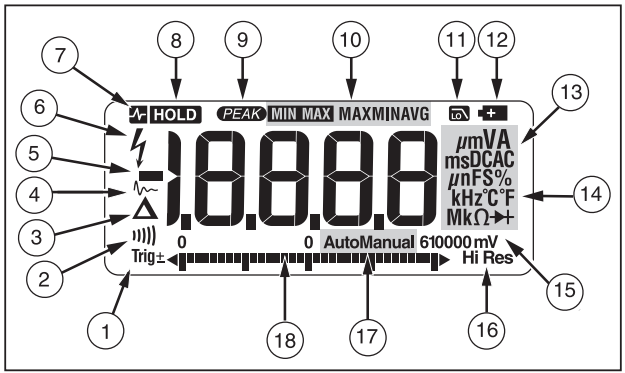

gaq101.eps

Figure 1. Display Features

Table 5. Display Features

Number	Feature	Indication
①	±	Polarity indicator for the analog bargraph.
	Trig±	Positive or negative slope indicator for Hz/duty cycle triggering.
②	)))	The continuity beeper is on.
③	Δ	Relative (REL) mode is active.
④	∿	Smoothing is active.
⑤	–	Negative readings, In relative mode, this sign indicates that the present input is less than the stored reference.
⑥	ϟ	High voltage present at the input. Appears if the input voltage is 30 V or greater (ac or dc), Also appears in low-pass filter mode. Also appears in cal, Hz, and duty cycle modes.
⑦	HOLD	AutoHOLD is active.
⑧	HOLD	Display HOLD is active,
⑨	PEAK	Peak Min Max modes and the response time is 250 µs (28 II only).
⑩	MIN MAX MAX MIN AVG	Minimum-maximum recording mode.
⑪	LO	Low-pass filter mode (28 II Only). See “Low-pass Filter (28 II)”.

Table 5. Display Features (cont.)

Number	Feature	Indication
⑫		Low battery. ⚠⚠ **Warning: To avoid false readings, which could lead to possible electric shock or personal injury, replace the battery as soon as the battery indicator appears.**
⑬	**A, µA, mA**	amperes (amps), microamp, milliamp
	V, mV	volts, millivolts
	µF, nF	microfarad, nanofarad
	nS	nanosiemens
	%	Percent. Used for duty cycle measurements.
	Ω, MΩ, kΩ	ohm, megohm, kilohm
	Hz, kHz	hertz, kilohertz
		Diode test mode.
	AC DC	Alternating current, direct current

Number	Feature	Indication
⑭	°C, °F	Degrees Celsius, Degrees Fahrenheit
⑮	**610000 mV**	Displays selected range
⑯	HiRes	High resolution (Hi Res) mode. HiRes=19,999 (28 II only)
⑰	Auto	Autorange mode. Automatically selects the range with the best resolution
	Manual	Manual range mode
⑱		The number of segments is relative to the full-scale value of the selected range. In normal operation 0 (zero) is on the left. The polarity indicator at the left of the graph indicates the polarity of the input. The graph does not operate with the capacitance, or frequency counter functions. For more information, see “Bargraph”. The bargraph also has a zoom function, as described under "Zoom Mode".

Table 5. Display Features (cont.)

Number	Feature	Indication
--	OL	Overload condition is detected.
Error Messages		
bAtt	Replace the battery immediately.	
di Sc	In the capacitance function, too much electrical charge is present on the capacitor being tested.	
CAL Err	Invalid calibration data. Calibrate Meter.	
EEPr Err	Invalid EEPROM data. Have the Meter serviced.	
OPEn	Open thermocouple detected.	
F2-	Invalid model. Have the Meter serviced.	
LEAd	⚠ Test lead alert. Displayed when the test leads are in the **A** or **mA/µA** terminal and the selected rotary switch position does not correspond to the terminal being used.	

Automatic Power-Off

The Meter automatically turns off if you do not turn the rotary switch or press a button for 30 minutes. If MIN MAX Recording is enabled, the Meter will not power off. Refer to Table 6 to disable automatic power-off.

Input Alert™ Feature

If a test lead is plugged into the mA/µA or A terminal, but the rotary switch is not set to the correct current position, the beeper warns you by making a chirping sound and the display flashes "LEAd", This warning is intended to stop you from attempting to measure voltage, continuity, resistance, capacitance, or diode values with the leads are plugged into a current terminal.

⚠ Caution

Placing the probes across (in parallel with) a powered circuit when a lead is plugged into a current terminal can damage the circuit you are testing and blow the Meter's fuse. This can happen because the resistance through the Meter's current terminals is very low, so the Meter acts like a short circuit.

Power-Up Options

Holding a button down while turning the Meter on activates a power-up option. Table 6 describes power-up options.

Table 6. Power-Up Options

Button	Power-Up Option
[ ] (Yellow)	Disables automatic power-off feature (Meter normally powers off in 30 minutes). The Meter reads "PoFF" until [ ] is released.
[MIN MAX]	Enables the Meter's calibration mode and prompts for a password. The Meter reads "CAL" and enters calibration mode. See *27 II/28 II Calibration Information*.
[RANGE]	Enables the Meter's smoothing feature. The Meter reads "S---" until [RANGE] is released.
[AutoHOLD]	Turns on all LCD segments.
[ıı))]	Disables the beeper for all functions. The Meter reads "bEEP" until [ıı))] is released.
[☼]	Disables auto backlight off (backlight normally disables after 2 minutes). The Meter reads "LoFF" until [☼] is released.
[REL Δ] (Relative mode)	Enables zoom mode for the bargraph. The Meter reads "2rEL" until [REL Δ] is released.
[Hz %]	Enables the Meter's high impedance mode when the mV dc function is used. The Meter reads "Hi 2" until [Hz %] is released. (28 II only)

How to Make Measurements

The following sections describe how to make measurements with the Meter.

AC and DC Voltage Measurements

Model 28 II features true-rms readings, which are accurate for distorted sine waves and other waveforms (with no dc offset) such as square waves, triangle waves, and staircase waves.

The Meter's voltage ranges are 600.0 mV, 6.000 V, 60.00 V, 600.0 V, and 1000 V. The select the 600.0 mV dc range, turn the rotary switch to mV.

Refer to Figure 2 to measure ac or dc voltage.

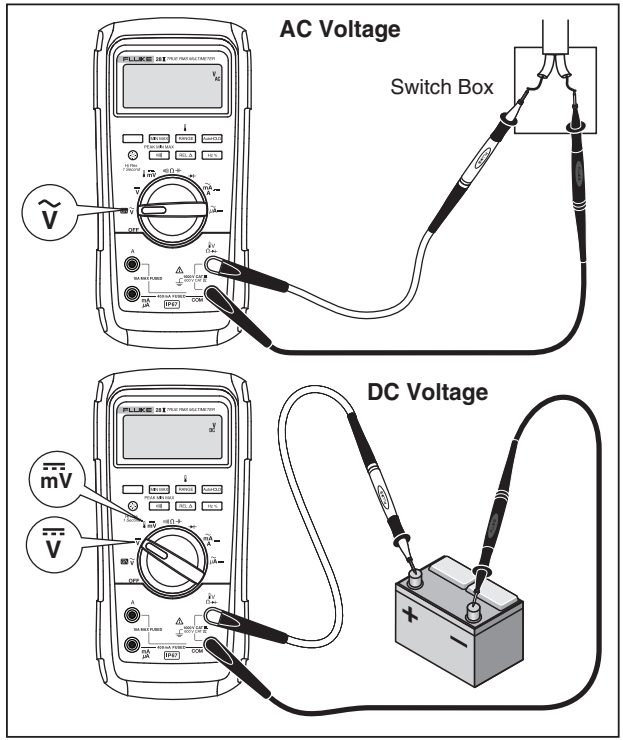

gaq102.eps

Figure 2. AC and DC Voltage Measurements

When measuring voltage, the Meter acts approximately like a 10-MΩ (10,000,000 Ω) impedance in parallel with the circuit. This loading effect can cause measurement errors in high-impedance circuits. In most cases, the error is negligible (0.1 % or less) if the circuit impedance is 10 kΩ (10,000 Ω) or less.

For better accuracy when measuring the dc offset of an ac voltage, measure the ac voltage first. Note the ac voltage range, then manually select a dc voltage range equal to or higher than the ac range. This procedure improves the accuracy of the dc measurement by ensuring that the input protection circuits are not activated.

Zero Input Behavior of True-rms Meters (28 II)

True-rms meters accurately measure distorted waveforms, but when the input leads are shorted together in the ac functions, the Meter displays a residual reading between 1 and 30 counts. When the test leads are open, the display readings may fluctuate due to interference. These offset readings are normal. They do not affect the Meter's ac measurement accuracy over the specified measurement ranges.

Unspecified input levels are:

- AC voltage: below 3 % of 600 mV ac, or 18 mV ac
- AC current: below 3 % of 60 mA ac, or 1.8 mA ac
- AC current: below 3 % of 600 µA ac, or 18 µA ac

Low-Pass Filter (28 II)

The 28 II is equipped with an ac low-pass filter. When measuring ac voltage or ac frequency, press [ ] to activate the low-pass filter mode (LO). The Meter continues measuring in the chosen mode, but now the signal diverts through a filter that blocks unwanted voltages above 1 kHz, refer to Figure 3. The lower frequency voltages pass with reduced accuracy to the measurement below 1 kHz. The low-pass filter can improve measurement performance on composite sine waves that are typically generated by inverters and variable frequency motor drives.

⚠⚠ Warning

To avoid possible electric shock or personal injury, do not use the low-pass filter to verify the presence of hazardous voltages. Voltages greater than what is indicated may be present. First, make a voltage measurement without the filter to detect the possible presence of hazardous voltage. Then, select the filter.

Note

When the low-pass filter is selected, the Meter goes to manual ranging mode. Select ranges by pressing RANGE*. Autoranging is not available with the low-pass filter.*

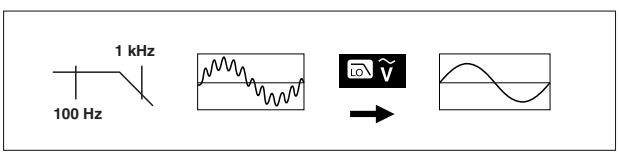

aom11f.eps

Figure 3. Low-Pass Filter

Temperature Measurements (28 II)

The Meter measures the temperature of a type-K thermocouple (included). Choose between degrees Celsius (°C) or degrees Fahrenheit (°F) by pushing RANGE.

⚠ Caution

To avoid possible damage to the Meter or other equipment, remember that while the Meter is rated for -200.0 °C to +1090.0 °C and -328.0 °F to 1994 °F, the included type-K thermocouple is rated to 260 °C. For temperatures out of that range, use a higher rated thermocouple.

Display ranges are -200.0 °C to +1090 °C and -328.0 °F to 1994 °F. Readings outside of these ranges show OL on the Meter display. When there is no thermocouple connected, the display also reads OPEn.

To measure temperature, do the following:

1. Connect a type-K thermocouple to the Meter's COM and 🌡 V Ω →⊢ terminals.
2. Turn the rotary switch to 🌡 mV.
3. Push [ ] to enter temperature mode.
4. Push RANGE to choose Celsius or Fahrenheit.

Continuity Tests

⚠Caution

To avoid possible damage to the Meter or to the equipment under test, disconnect circuit power and discharge all high-voltage capacitors before testing for continuity.

The continuity test features a beeper that sounds as long as a circuit is complete. The beeper allows you to perform quick continuity tests without having to watch the display.

To test for continuity, set up the Meter as shown in Figure 4.

Press [ )))] to turn the continuity beeper on or off.

The continuity function detects intermittent opens and shorts lasting as little as 1 ms. A brief short causes the Meter to emit a short beep.

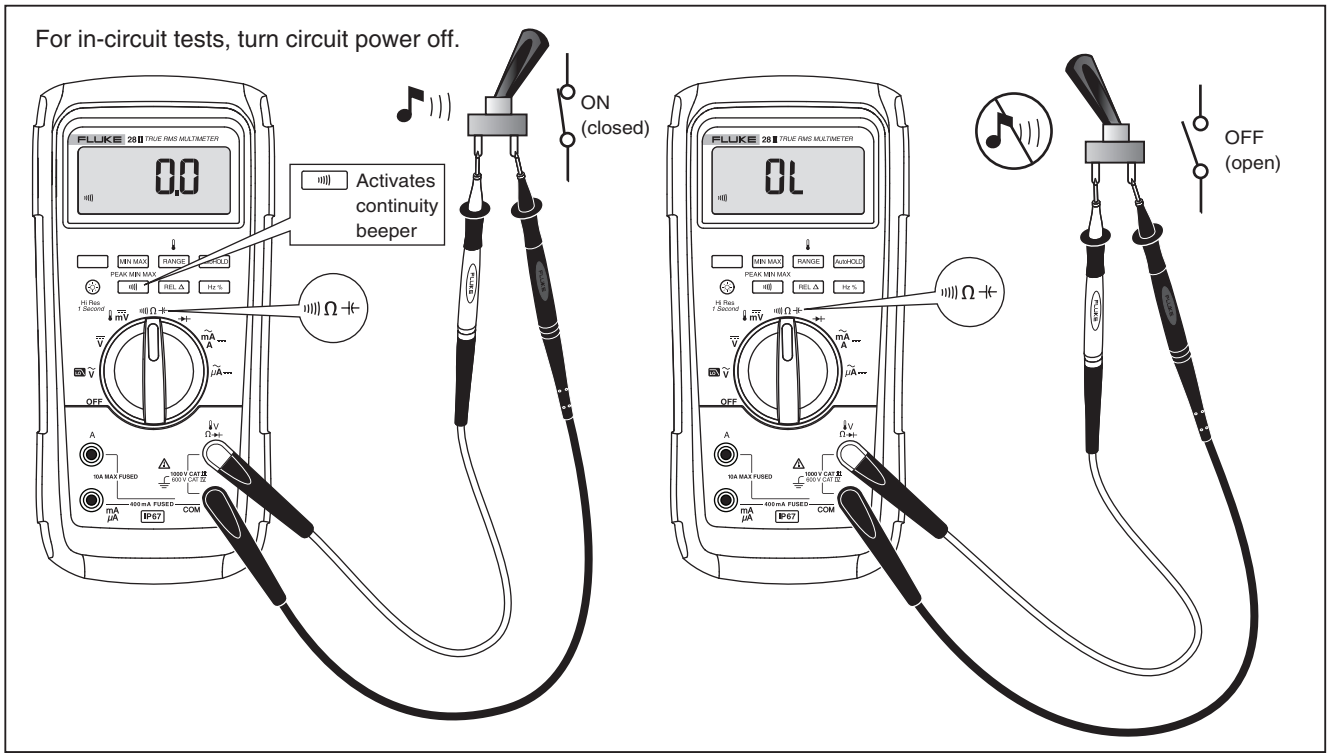

gaq103.eps

Figure 4. Continuity Tests

Resistance Measurements

⚠Caution

To avoid possible damage to the Meter or to the equipment under test, disconnect circuit power and discharge all high-voltage capacitors before measuring resistance.

The Meter measures resistance by sending a small current through the circuit. Because this current flows through all possible paths between the probes, the resistance reading represents the total resistance of all paths between the probes.

The Meter's resistance ranges are 600.0 Ω, 6.000 kΩ, 60.00 kΩ, 600.0 kΩ, 6.000 MΩ, and 50.00 MΩ.

Set up the Meter as shown in Figure 5 to measure resistance.

The following are some tips for measuring resistance:

- The measured value of a resistor in a circuit is often different from the resistor's rated value.
- The test leads can add 0.1 Ω to 0.2 Ω of error to resistance measurements. To test the leads, touch the probe tips together and read the resistance of the leads. If necessary, you can use the relative (REL) mode to automatically subtract this value.
- The resistance function can produce enough voltage to forward-bias silicon diode or transistor junctions, causing them to conduct. If this is suspected, press [RANGE] to apply a lower current in the next higher range. If the value is higher, use the higher value. Refer to the Input Characteristics table in the specifications section for typical short-circuit currents.

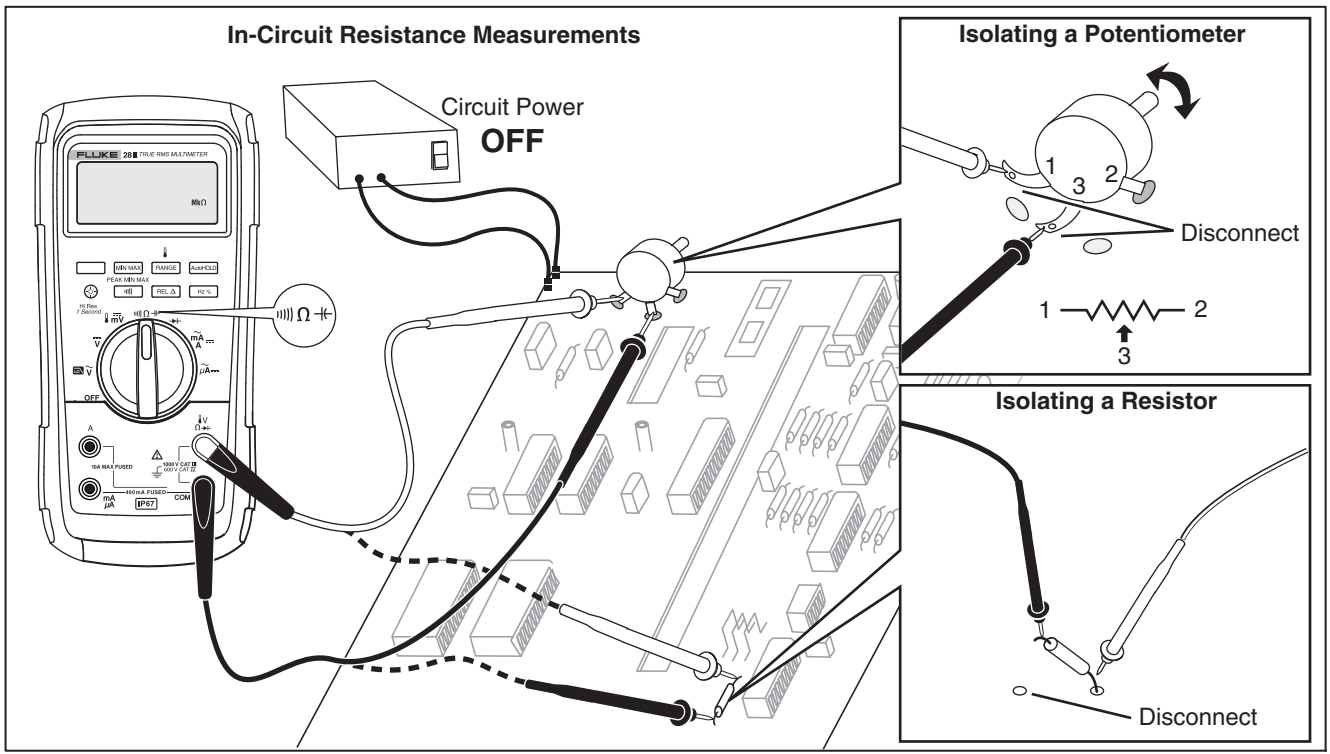

gaq106.eps

Figure 5. Resistance Measurements

How to Use Conductance for High Resistance or Leakage Tests

Conductance, the inverse of resistance, is the ability of a circuit to pass current. High values of conductance correspond to low values of resistance.

The Meter's 60-nS range measures conductance in nanosiemens (1 nS = 0.000000001 siemens). Because such small amounts of conductance correspond to extremely high resistance, the nS range lets you determine the resistance of components up to 100,000 MΩ, 1/1 nS = 1,000 MΩ.

To measure conductance, set up the Meter for measuring resistance as shown in Figure 5, then press RANGE until the nS indicator appears on the display.

The following are some tips for measuring conductance:

- High-resistance readings are susceptible to electrical noise. To smooth out most noisy readings, enter the MIN MAX recording mode; then step to the average (AVG) reading.
- There is normally a residual conductance reading with the test leads open. To ensure accurate readings, use the relative (REL) mode to subtract the residual value.

Capacitance Measurements

⚠Caution

To avoid possible damage to the Meter or to the equipment under test, disconnect circuit power and discharge all high-voltage capacitors before measuring capacitance. Use the dc voltage function to confirm that the capacitor is discharged.

The Meter's capacitance ranges are 10.00 nF, 100.0 nF, 1.000 µF, 10.00 µF, 100.0 µF, and 9999 µF.

To measure capacitance, set up the Meter as shown in Figure 6.

To improve the accuracy of measurements less than 1000 nF, use the relative (REL) mode to subtract the residual capacitance of the Meter and leads.

Note

*If too much electrical charge is present on the capacitor being tested, the display shows "***diSC***".*

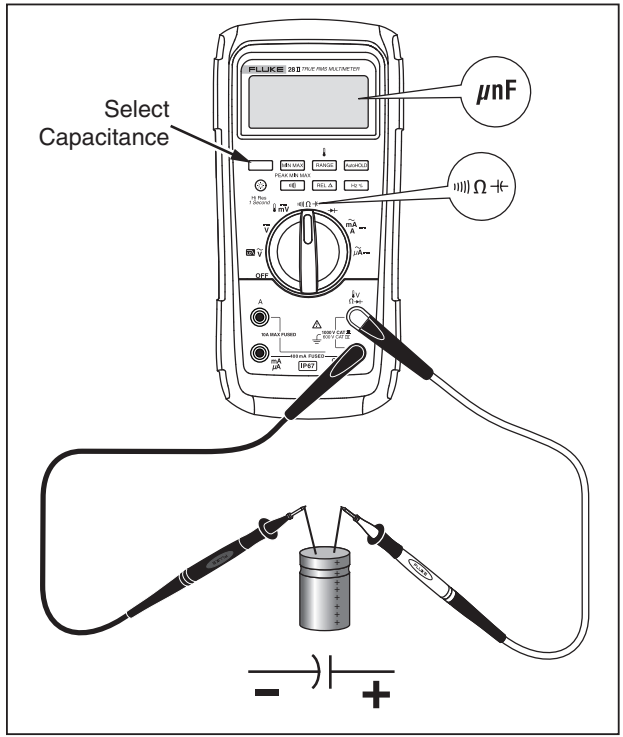

gaq104.eps

Figure 6. Capacitance Measurements

Diode Tests

⚠Caution

To avoid possible damage to the Meter or to the equipment under test, disconnect circuit power and discharge all high-voltage capacitors before testing diodes.

Use the diode test to check diodes, transistors, silicon controlled rectifiers (SCRs), and other semiconductor devices. This function tests a semiconductor junction by sending a current through the junction, then measuring the junction's voltage drop. A good silicon junction drops between 0.5 V and 0.8 V.

To test a diode out of a circuit, set up the Meter as shown in Figure 7. For forward-bias readings on any semiconductor component, place the red test lead on the component's positive terminal and place the black lead on the component's negative terminal.

In a circuit, a good diode should still produce a forward-bias reading of 0.5 V to 0.8 V; however, the reverse-bias reading can vary depending on the resistance of other pathways between the probe tips.

A short beep sounds if the diode is good (<0.85 V). A continuous beep sounds if the reading is ≤0.100 V. This reading would indicate a short circuit. The display shows “OL” if the diode is open.

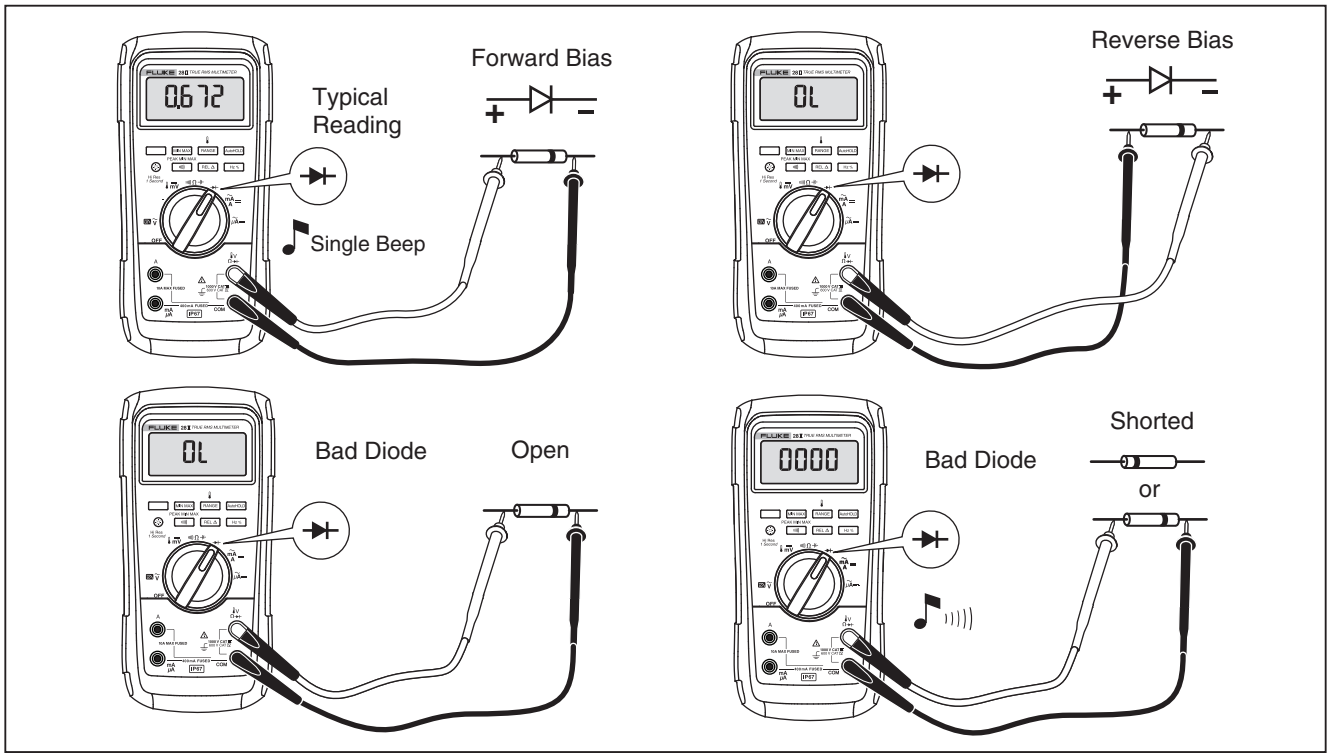

gaq109.eps

Figure 7. Diode Tests

AC or DC Current Measurements

⚠⚠Warning

To avoid possible electric shock or personal injury, never attempt an in-circuit current measurement where the open-circuit potential to earth is greater than 1000 V. You may damage the Meter or be injured if the fuse blows during such a measurement.

⚠Caution

To avoid possible damage to the Meter or to the equipment under test:

- **Check the Meter's fuses before measuring current.**
- **Use the proper terminals, function, and range for all measurements.**
- **Never place the probes across (in parallel with) any circuit or component when the leads are plugged into the current terminals.**

To measure current, you must break the circuit under test, then place the Meter in series with the circuit.

The Meter's current ranges are 600.0 µA, 6000 µA, 60.00 mA, 400.0 mA, 6.000 A, and 10.00 A.

To measure current, refer to Figure 8 and proceed as follows:

1. Turn off power to the circuit. Discharge all high-voltage capacitors.
2. Insert the black lead into the **COM** terminal. For currents between 0 mA and 400 mA, insert the red lead into the **mA/µA** terminal. For currents above 400 mA, insert the red lead into the **A** terminal.

Note

To avoid blowing the Meter's 400-mA fuse, use the mA/µA terminal only if you are sure the current is less than 400 mA continuously or less than 600 mA for 18 hours or less.

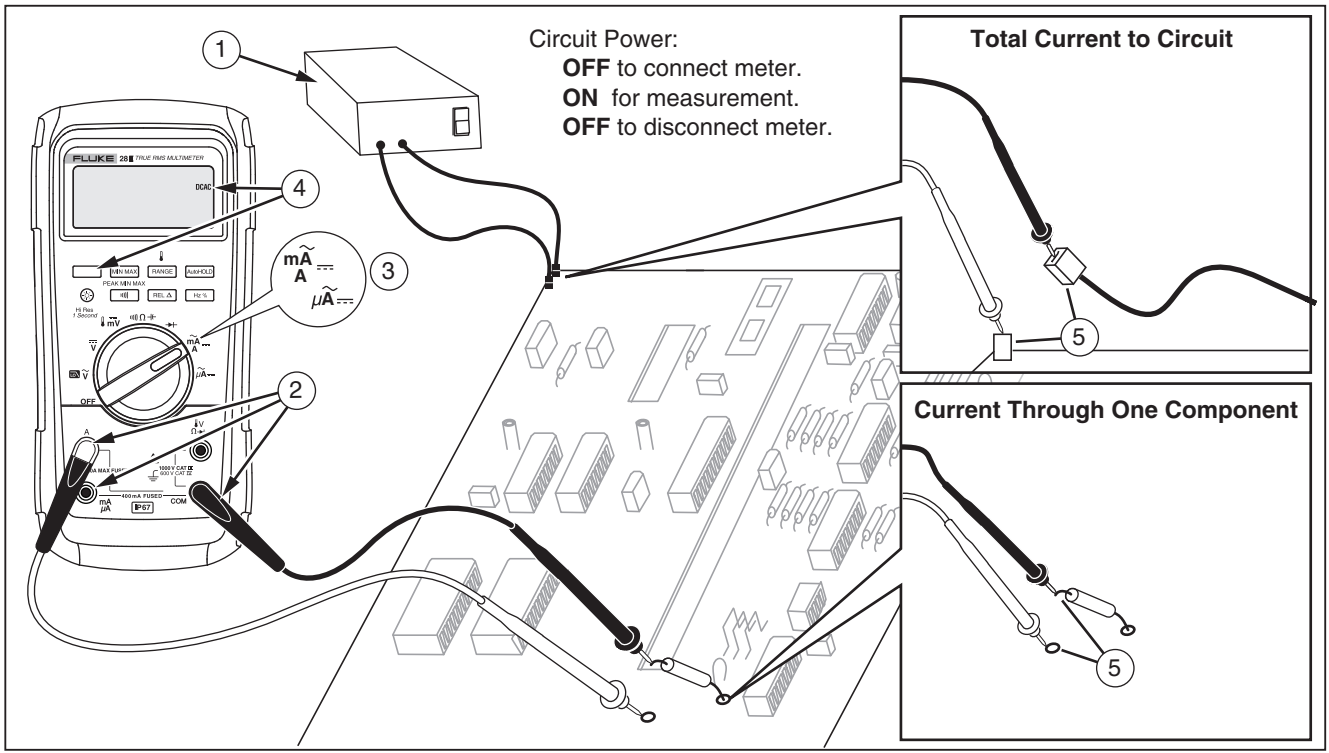

gaq107.eps

Figure 8. Current Measurements

3. If you are using the **A** terminal, set the rotary switch to mA/A. If you are using the **mA/µA** terminal, set the rotary switch to µA⎓ for currents below 6000 µA (6 mA), or mA/A~ for currents above 6000 µA.
4. To measure dc current, press [ ].
5. Break the circuit path to be tested. Touch the black probe to the more negative side of the break; touch the red probe to the more positive side of the break. Reversing the leads will produce a negative reading, but will not damage the Meter.
6. Turn on power to the circuit; then read the display. Be sure to note the unit given at the right side of the display (µA, mA, or A).
7. Turn off power to the circuit and discharge all high-voltage capacitors. Remove the Meter and restore the circuit to normal operation.

The following are some tips for measuring current:

- If the current reading is 0 and you are sure the Meter is set up correctly, test the Meter's fuses as described under "Testing the Fuses".
- A current meter drops a small voltage across itself, which might affect circuit operation. You can calculate this burden voltage using the values listed in the specifications in the Input Characteristics table.

Frequency Measurements

The Meter measures the frequency of a voltage or current signal by counting the number of times the signal crosses a threshold level each second.

Table 7 summarizes the trigger levels and applications for measuring frequency using the various ranges of the Meter's voltage and current functions.

To measure frequency, connect the Meter to the signal source; then press [Hz %]. Pressing [ ))))] switches the trigger slope between + and -, as indicated by the symbol at the left side of the display (refer to Figure 9 under "Duty Cycle"). Pressing [AutoHOLD] stops and starts the counter.

The Meter autoranges to one of five frequency ranges: 199.99 Hz, 1999.9 Hz, 19.999 kHz, 199.99 kHz, and greater than 200 kHz. For frequencies below 10 Hz, the display is updated at the frequency of the input. Below 0.5 Hz, the display may be unstable.

The following are some tips for measuring frequency:

- If a reading shows as 0 Hz or is unstable, the input signal may be below or near the trigger level. You can usually correct these problems by selecting a lower range, which increases the sensitivity of the Meter. In the $\tilde{V}$ function, the lower ranges also have lower trigger levels.

If a reading seems to be a multiple of what you expect, the input signal may be distorted. Distortion can cause multiple triggerings of the frequency counter. Selecting a higher voltage range might solve this problem by decreasing the sensitivity of the Meter. You can also try selecting a dc range, which raises the trigger level. In general, the lowest frequency displayed is the correct one.

Table 7. Functions and Trigger Levels for Frequency Measurements

Function	Range	Approximate Trigger Level	Typical Application
Ṽ	6 V, 60 V, 600 V, 1000 V	±5 % of scale	Most signals.
Ṽ	600 mV	±30 mV	High-frequency 5 V logic signals. (The dc-coupling of the V̄ function can attenuate high-frequency logic signals, reducing their amplitude enough to interfere with triggering.)
mV̄	600 mV	40 mV	Refer to the measurement tips given before this table.
V̄	6 V	1.7 V	5 V logic signals (TTL).
V̄	60 V	4 V	Automotive switching signals.
V̄	600 V	40 V	Refer to the measurement tips given before this table.
V̄	1000 V	100 V	
))) Ω ⊣⊢ ⊳⊢	Frequency counter characteristics are not available or specified for these functions.		
A~	All ranges	±5 % of scale	AC current signals.
µA⎓	600 µA, 6000 µA	30 µA , 300 µA	Refer to the measurement tips given before this table.
mA⎓	60 mA, 400 mA	3.0 mA , 30 mA	
A⎓	6 A, 10 A	.30 A, 3.0 A	

Duty Cycle Measurements

Duty cycle (or duty factor) is the percentage of time a signal is above or below a trigger level during one cycle (Figure 9). The duty cycle mode is optimized for measuring the on or off time of logic and switching signals. Systems such as electronic fuel injection systems and switching power supplies are controlled by pulses of varying width, which can be checked by measuring duty cycle.

To measure duty cycle, set up the Meter to measure frequency; then press Hz a second time. As with the frequency function, you can change the slope for the Meter's counter by pressing [ ))))] .

For 5-V logic signals, use the 6-V dc range. For 12-V switching signals in automobiles, use the 60 V dc range. For sine waves, use the lowest range that does not result in multiple triggering. (Normally, a distortion-free signal can be up to ten times the amplitude of the selected voltage range.)

If a duty cycle reading is unstable, press MIN MAX; then scroll to the AVG (average) display.

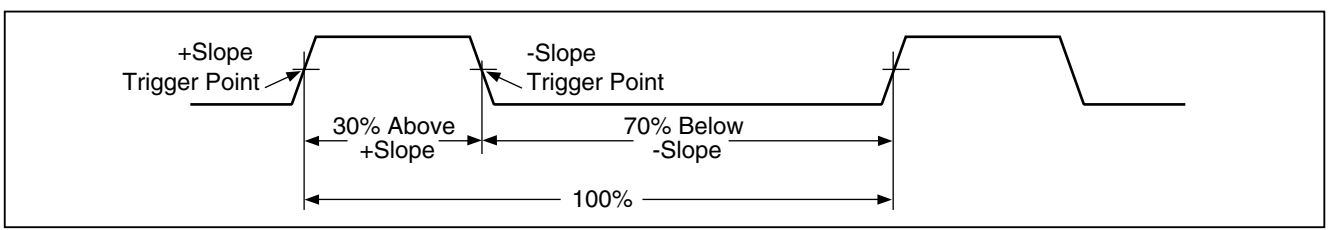

iyf.eps

Figure 9. Components of Duty Cycle Measurements

How to Determine Pulse Width

For a periodic waveform (its pattern repeats at equal time intervals), you can determine the amount of time that the signal is high or low as follows:

1. Measure the signal's frequency.
2. Push [Hz %] a second time to measure the signal's duty cycle. Push [ıı))] to select a measurement of the signal's positive or negative pulse, refer to Figure 9.
3. Use the following formula to determine the pulse width:

$$\text{Pulse Width (in seconds)} = \frac{\text{\% Duty Cycle} \div 100}{\text{Frequency}}$$

Bargraph

The analog bargraph functions like the needle on an analog meter, but without the overshoot. The bargraph updates 40 times per second. Because the graph responds 10 times faster than the digital display, it is useful for making peak and null adjustments and observing rapidly changing inputs. The graph is not shown for capacitance, frequency counter functions, temperature, or peak min max.

The number of lit segments indicates the measured value and is relative to the full-scale value of the selected range.

In the 60-V range, for example, the major divisions on the scale represent 0, 15, 30, 45, and 60 V. An input of -30 V lights the negative sign and the segments up to the middle of the scale.

The bargraph also has a zoom function, as described under "Zoom Mode".

Zoom Mode (Power Up Option Only)

To use the Rel Zoom Bargraph:

1. Hold down [REL Δ] while turning the Meter on. The display reads "2rEL".
2. Select the relative mode by pressing [REL Δ] again.
3. The center of the bargraph now represents zero and the sensitivity of the bargraph increases by a factor of 10. Measured values more negative than the stored reference activate segments to the left of center; values more positive activate segments to the right of center.

Uses for the Zoom Mode

The relative mode, combined with the increased sensitivity of the bargraph's zoom mode, helps you make fast and accurate zero and peak adjustments.

For zero adjustments, set the Meter to the desired function, short the test leads together, press [REL Δ]; then connect the leads to the circuit under test. Adjust the circuit's variable component until the display reads zero. Only the center segment on the zoom bargraph is lit.

For peak adjustments, set the Meter to the desired function, connect the leads to the circuit under test; then press [REL Δ]. The display reads zero. As you adjust for a positive or negative peak, the bargraph length increases to the right or left of zero. If an overange symbol (◀ ▶) lights, press [REL Δ] twice to set a new reference; then continue with the adjustment.

HiRes Mode (28 II)

On a Model 28 II, push ☼ for one second to enter the high-resolution (HiRes) 4-1/2 digit mode. Readings are displayed at 10 times the normal resolution with a maximum display of 19,999 counts. The HiRes mode works in all modes except capacitance, frequency counter functions, temperature, and the 250 µs (peak) MIN MAX modes.

To return to the 3-1/2 digit mode, push ☼ for one second.

MIN MAX Recording Mode

The MIN MAX mode records minimum and maximum input values. When the inputs go below the recorded minimum value or above the recorded maximum value, the Meter beeps and records the new value. This mode can be used to capture intermittent readings, record maximum readings while you are away or record readings while you are operating the equipment under test and cannot watch the Meter. MIN MAX mode can also calculate an average of all readings taken since the MIN MAX mode was activated. To use MIN MAX mode, refer to the functions in Table 8.

Response time is the length of time an input must stay at a new value to be recorded. A shorter response time captures shorter events, but with decreased accuracy. Changing the response time erases all recorded readings. Model 27 II has 100 millisecond response time; Model 28 II has 100 millisecond and 250 µs (peak) response times. The 250 µs response time is indicated by "PEAK" on the display.

The 100 millisecond response time is best for recording power supply surges, inrush currents, and finding intermittent failures.

The true average value (AVG) displayed is the mathematical integral of all readings taken since the start of recording (overloads are discarded). The average reading is useful for smoothing out unstable inputs, calculating power consumption, or estimating the percentage of time a circuit is active.

Min Max records the signal extremes lasting longer than 100 ms.

Peak records the signal extremes lasting longer than 250 µs.

Smooth Feature (Power Up Option Only)

When the input signal changes rapidly, "smoothing" provides a steadier reading on the display.

To use the smooth feature:

1. Hold down [RANGE] while turning the Meter on. The display will read "S---" until [RANGE] is released.
2. The smooth icon (∿) will appear on the left side of the display to let you know that smoothing is active.

Table 8. MIN MAX Functions

Button	MIN MAX Function
MIN MAX	Enter MIN MAX recording mode. The Meter is locked in the range displayed before you entered MIN MAX mode. (Select the desired measurement function and range before entering MIN MAX.) The Meter beeps each time a new minimum or maximum value is recorded.
MIN MAX (while in MIN MAX mode)	Step through maximum (MAX), minimum (MIN), average (AVG) and present values.
))))) PEAK MIN MAX	Model 28 II only: Select 100 ms or 250 µs response time. (The 250 µs response time is indicated by PEAK on the display.) Stored values are erased. The present and AVG (average) values are not available when 250 µs is selected.
AutoHOLD	Stop recording without erasing stored values. Press again to resume recording.
MIN MAX (hold for 1 second)	Exit MIN MAX mode. Stored values are erased. The Meter stays in the selected range.

AutoHOLD Mode

⚠⚠Warning

To avoid possible electric shock or personal injury, do not use AutoHOLD mode to determine that circuits are without power. The AutoHOLD mode will not capture unstable or noisy readings.

The AutoHOLD mode captures the present reading on the display. When a new, stable reading is detected, the Meter beeps and displays the new reading. To enter or exit AutoHOLD mode, press AutoHOLD.

Relative Mode

Selecting relative mode (REL Δ) causes the Meter to zero the display and store the present reading as the reference for subsequent measurements. The Meter is locked into the range selected when you pressed REL Δ. Press REL Δ again to exit this mode.

In relative mode, the reading shown is always the difference between the present reading and the stored reference value. For example, if the stored reference value is 15.00 V and the present reading is 14.10 V, the display shows -0.90 V.

Maintenance

⚠⚠Warning

To avoid possible electric shock or personal injury, repairs or servicing not covered in this manual should be performed only by qualified personnel as described in the *27 II/28 II Calibration Information*.

General Maintenance

Periodically wipe the case with a damp cloth and mild detergent. Do not use abrasives or solvents.

Dirt or moisture in the terminals can affect readings and can falsely activate the Input Alert feature. Clean the terminals as follows:

1. Turn the Meter off and remove all test leads.
2. Shake out any dirt that may be in the terminals.
3. Soak a clean swab with mild detergent and water. Work the swab around in each terminal. Dry each terminal using canned air to force the water and detergent out of the terminals.

Fuse Test

As shown in Figure 10, with the Meter in the))) Ω ⊣⊢ function, insert a test lead into the V Ω→+ jack and place the probe tip on the other end of the test lead against the metal of the current input jack. If "LEAd" appears in the display, the probe tip has been inserted too far into the amps input jack. Back the lead out a bit until the message disappears and either OL or a resistance reading appears in the display. The resistance value should be as shown in Figure 10. If the tests give readings other than those shown, have the Meter serviced.

⚠⚠Warning

To avoid electrical shock or personal injury, remove the test leads and any input signals before replacing the battery or fuses. To prevent damage or injury, install ONLY specified replacement fuses with the amperage, voltage, and speed ratings shown in Table 9.

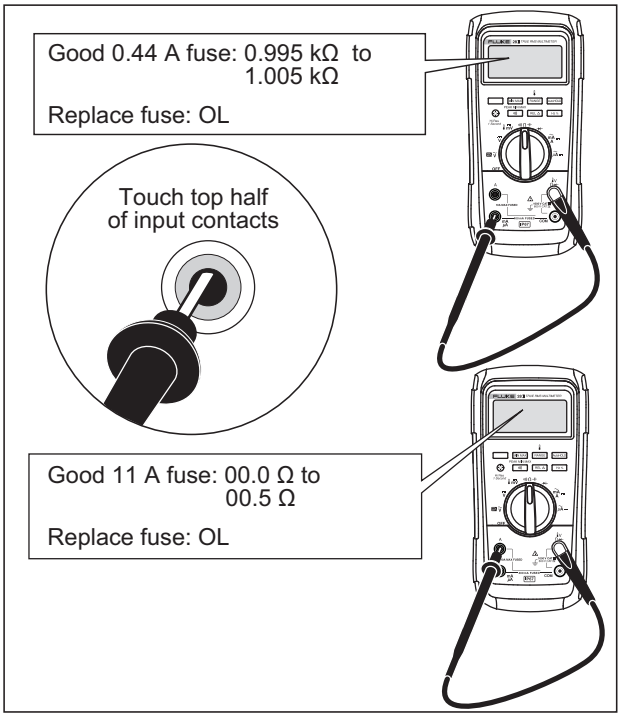

gaq105.eps

Figure 10. Current Fuse Test

How to Replace the Batteries

Replace the batteries with three AA batteries (NEDA 15A IEC LR6).

⚠⚠Warning

To avoid false readings, which could lead to possible electric shock or personal injury, replace the battery as soon as the battery indicator (▬) appears. If the display shows "bAtt" the Meter will not function until the battery is replaced.

MSHA approved for use with three Energizer P/N E91 or three Duracell P/N MN1500 1.5 volt, "AA" alkaline batteries only. All cells are to be replaced at the same time with identical part number cells in fresh air locations only.

Replace the battery as follows, refer to Figure 11:

1. Turn the rotary switch to OFF and remove the test leads from the terminals.
2. Remove the six Phillips-head screws from the case bottom and remove the battery door (①).

   Note

   While lifting the battery door, ensure the rubber gasket stays attached to the battery compartment barrier.

3. Remove the three batteries and replace all three with AA Alkaline batteries (②).

4. Ensure the battery compartment gasket (③) is properly installed around the outside edge of the battery compartment barrier.
5. Replace the battery door by aligning the battery compartment barrier with battery compartment.
6. Secure the door with the six Phillips-head screws.

How to Replace the Fuses

Referring to Figure 11, examine or replace the Meter's fuses as follows:

1. Turn the rotary switch to OFF and remove the test leads from the terminals
2. Refer to step 2 under the How to Replace the Batteries section above to remove the battery door.
3. Remove the fuse compartment seal (④) from the fuse compartment.
4. Gently lift out the fuse compartment door (⑤) from the fuse compartment.
5. Remove the fuse by gently prying one end loose, then sliding the fuse out of its bracket (⑥).
6. Install ONLY specified replacement fuses with the amperage, voltage, and speed ratings shown in Table 9. The 440-mA fuse is shorter than the 10-A fuse. For correct placement of each fuse, note the marking on the printed circuit board under each fuse.
7. Replace the fuse compartment door by aligning the arrow on the fuse door with the arrow on the case bottom and lowering the door into the fuse compartment.
8. Replace the fuse compartment seal by aligning the tab on the seal with the outline on the case bottom. Ensure the seal (④) is properly seated.
9. Refer to steps four through six under the Replacing the Batteries section above to reinstall the battery door.

Service and Parts

If the Meter fails, check the battery and fuses. Review this manual to verify proper use of the Meter.

Replacement parts and accessories are shown in Table 9 and Figure 12.

To order parts and accessories, refer to “How to Contact Fluke”.

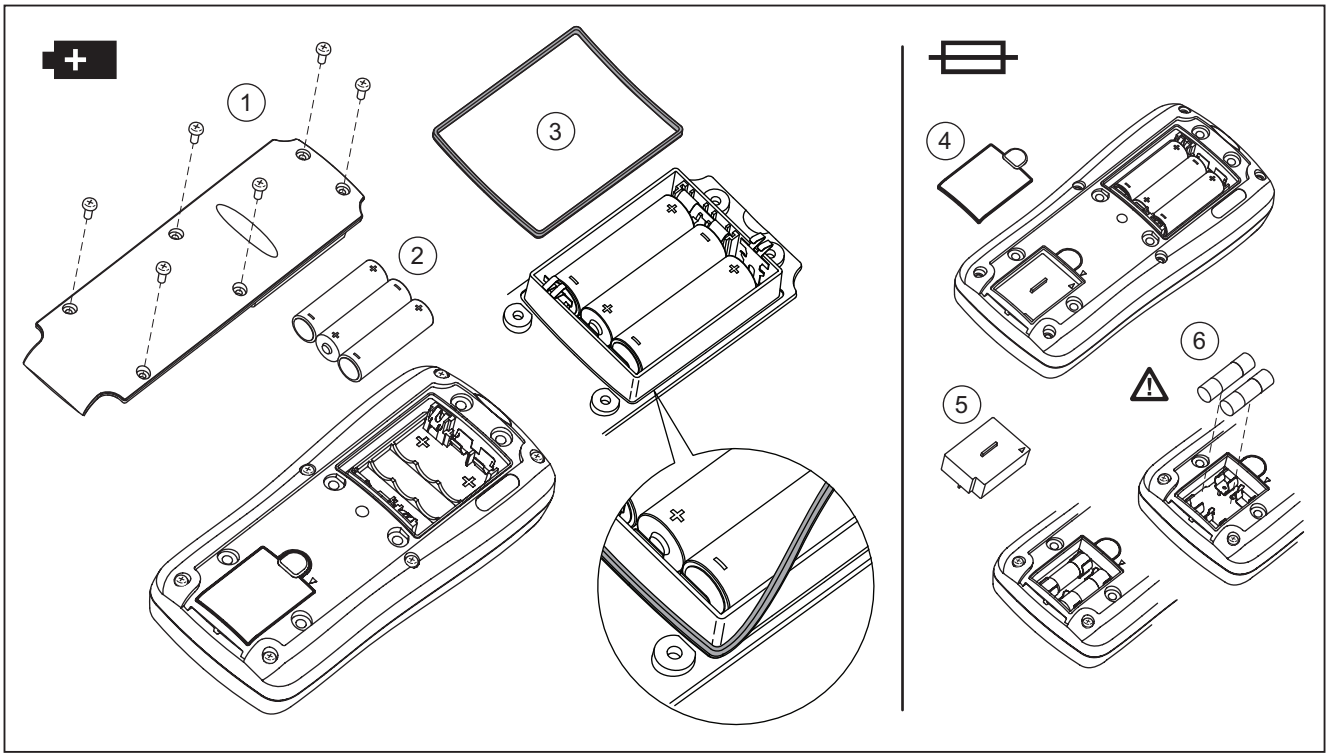

gaq10.eps

Figure 11. Battery and Fuse Replacement

Table 9. Replacement Parts

Description	Qty.	Fluke Part or Model Number
Battery, AA 1.5 V	3	376756
Fuse, 0.440 A, 1000 V, FAST	1	943121
Fuse, 11 A, 1000 V, FAST	1	803293
Fuse Access Door	1	3400480
Screw	6	3861068
Gasket, Battery Door	1	3439087
Fuse Cap	1	3440546
Holster	1	3321048
Battery Door	1	3321030
Alligator Clip, Black	1	AC72
Alligator Clip, Red	1	
Test Lead Set	1	TL75
Integrated DMM Temperature Probe (28 II Only)	1	80BK-A
27 II / 28 II Users Manual CD	1	3368139
27 II / 28 II Getting Started Manual	1	3368142
⚠ To ensure safety, use exact replacement only.		

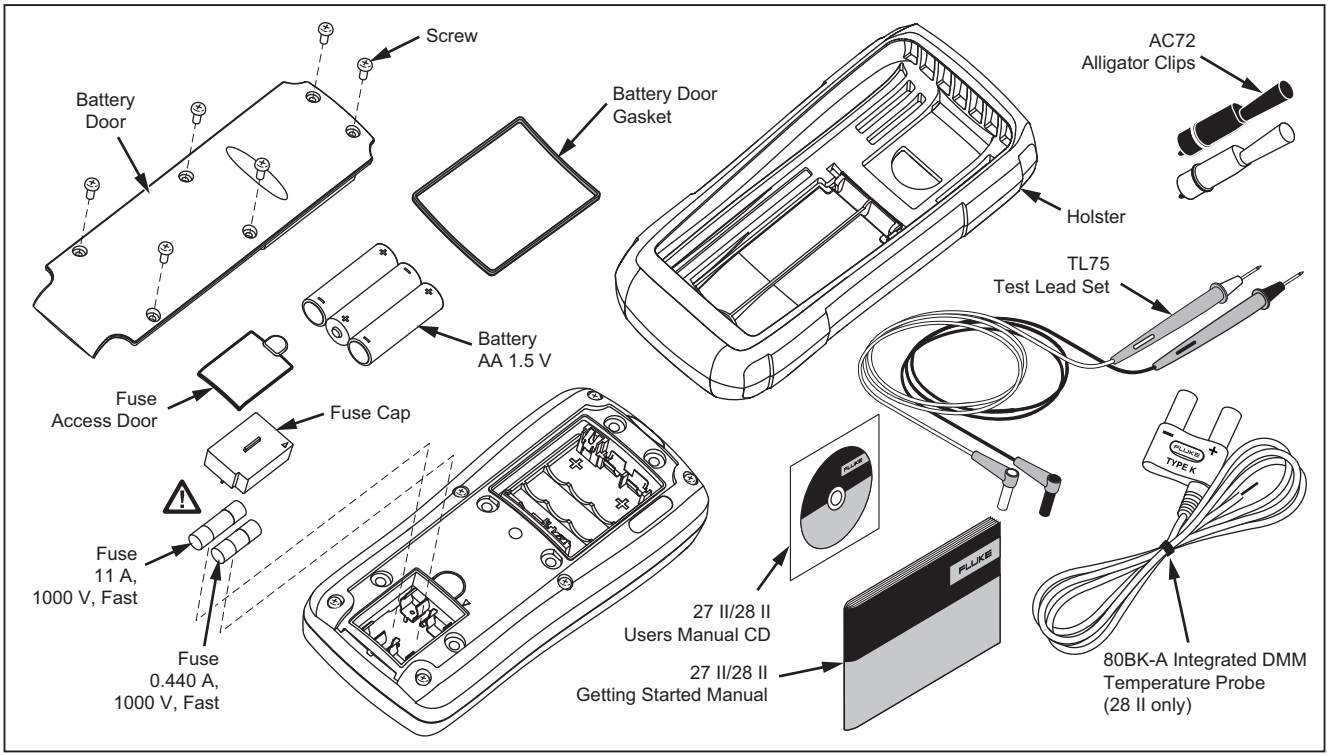

gaq111.eps

Figure 12. Replacement Parts

Table 10. Accessories

Item	Description
AC72	Alligator Clips for use with TL75 test lead set
AC220	Safety Grip, Wide-Jaw Alligator Clips
TPAK	ToolPak Magnetic Hanger
C25	Carrying Case, Soft
TL75	Silicone test lead set with probes
TL220	Industrial Test Lead Set
TL224	Test Lead Set, Heat-Resistant Silicone Modular
TP1	Test Probes, Flat Blade, Slim Reach
TP4	Test Probes, 4 mm diameter, Slim Reach
Fluke accessories are available from an authorized Fluke distributor.	

General Specifications

Maximum voltage between any terminal and earth ground ..... 1000 V rms

⚠ **Fuse for mA inputs** ..... 440 mA, 1000 V FAST Fuse

⚠ **Fuse for A inputs** ..... 11 A, 1000 V FAST Fuse

Display

Digital ..... 6000 counts, updates 4/sec (Model 28 II also has 19,999 counts in high-resolution mode).

Bargraph ..... 33 segments; updates 40/sec

Altitude

Operating ..... 2,000 meters

Storage ..... 10,000 meters

Temperature

Operating ..... -15 °C to +55 °C, to -40 °C for 20 minutes when taken from 20 °C

Storage ..... -55 °C to +85 °C (without battery)
-55 °C to +60 °C (with battery)

Temperature coefficient

28 II ..... 0.05 X (specified accuracy) / °C (<18 °C or >28 °C)

27 II ..... 0.1 X (specified accuracy) / °C (<18 °C or >28 °C)

Electromagnetic Compatibility (EN 61326-1:1997)	In an RF field of 3 V/M, accuracy = specified accuracy +20 counts, except 600 µA dc range total accuracy = specified accuracy +60 counts. Temperature not specified
Relative Humidity	0 % to 95 % (0 °C to 35 °C) 0 % to 70 % (35 °C to 55 °C)
Battery Type	3 AA Alkaline batteries, NEDA 15A IEC LR6, MSHA approved for use with three Energizer P/N E91 or three Duracell P/N MN1500 1.5 Volt, AA alkaline batteries only.
Battery Life	800 hrs typical without backlight (Alkaline)
Vibration	Per MIL-PRF-28800 for a Class 2 instrument
Shock	1 Meter drop per IEC 61010 (3 Meter drop with holster)
Size (H x W x L)	1.80 in x 3.95 in x 8.40 in (4.57 cm x 10.0 cm x 21.33 cm)
Size with Holster	2.50 in x 3.95 in x 7.80 in (6.35 cm x 10.0 cm x 19.81 cm)
Weight	1.14 lb (517.1 g)
Weight with Holster and Flex-Stand	1.54 lb (698.5 g)
Safety Compliance	Complies with ANSI/ISA S82.01-2004, CAN/CSA C22.2 61010-1-04 to 600 V Measurement Category IV. Licensed by TÜV to EN61010-1
Certifications	CSA, TÜV, CE, N10140, GOST,
IP Rating	67 (Protected against dust and the effect of immersion between 15 cm and 1 m for 30 min)
MSHA Approval No	18-A100015-0

Detailed Specifications

For all detailed specifications:

Accuracy is specified for 2 years after calibration, at operating temperatures of 18 °C to 28 °C, with relative humidity at 0 % to 95 %. Accuracy specifications take the form of ±([% of Reading] + [Number of least-significant digits]). For Model 28 II in the 4 ½-digit mode, multiply the number of least-significant digits (counts) by 10.

27 II AC Voltage

<table>
<tr><th rowspan="2">Range</th><th rowspan="2">Resolution</th><th colspan="3">Accuracy [2]</th></tr>
<tr><th>40 Hz – 2 kHz</th><th>2 kHz – 10 kHz</th><th>10 kHz – 30 kHz</th></tr>
<tr><td>600.0 mV</td><td>0.1 mV</td><td rowspan="4">±(0.5 % + 3)</td><td rowspan="4">±(2 % + 3)</td><td rowspan="3">±(4 % + 10)</td></tr>
<tr><td>6.000 V</td><td>0.001 V</td></tr>
<tr><td>60.00 V</td><td>0.01 V</td></tr>
<tr><td>600.0 V</td><td>0.1 V</td><td>±(4 % + 10) [1]</td></tr>
<tr><td>1000 V</td><td>1 V</td><td>±(1.0 % + 3)</td><td>±(3 % + 3)</td><td>Unspecified</td></tr>
</table>

[1] Specified to a maximum of 300 V ac

[2] Below 5 % of range, temperature coefficient is 0.15 X (specified accuracy)/ °C (>40 °C).

28 II AC Voltage

AC conversions are ac-coupled and valid from 3 % to 100 % of range.

<table>
<tr><th rowspan="2">Range</th><th rowspan="2">Resolution</th><th colspan="6">Accuracy</th></tr>
<tr><th>45 – 65 Hz</th><th>15 – 200 Hz</th><th>200 – 440 Hz</th><th>440 Hz – 1 kHz</th><th>1 – 5 kHz</th><th>5 – 20 kHz</th></tr>
<tr><td>600.0 mV</td><td>0.1 mV</td><td rowspan="2">±(0.7 % + 4)</td><td colspan="4" rowspan="4">±(1.0 % + 4) [1]</td><td rowspan="2">±(2 % + 4)</td><td rowspan="2">±(2 % + 20) [2]</td></tr>
<tr><td>6.000 V</td><td>0.001 V</td></tr>
<tr><td>60.00 V</td><td>0.01 V</td><td rowspan="4">±(0.7 % + 2)</td><td rowspan="2">±(2 % + 4) [3]</td><td>Unspecified</td></tr>
<tr><td>600.0 V</td><td>0.1 V</td><td>Unspecified</td></tr>
<tr><td>1000 V</td><td>1 V</td><td>Unspecified</td><td>Unspecified</td></tr>
<tr><td colspan="2">Low-Pass Filter</td><td>±(1.0 % + 4) [1]</td><td>+1.0 % + 4
-6.0 % - 4 [4]</td><td>Unspecified</td><td>Unspecified</td><td>Unspecified</td></tr>
</table>

[1] Below 30 Hz, use smoothing function.

[2] Below 10 % of range, add 12 counts.

[3] Frequency range: 1 to 2.5 kHz

[4] Specification increases from -1 % to -6 % at 440 Hz when filter is used.

DC Voltage, Conductance, and Resistance

Function	Range	Resolution	Accuracy
mV dc	600.0 mV	0.1 mV	±(0.1 % + 1)
V dc	6.000 V	0.001 V	±(0.05 % + 1)
	60.00 V	0.01 V	
	600.0 V	0.1 V	
	1000 V	1 V	
Ω	600.0 Ω	0.1 Ω	±(0.2 % + 2) [2]
	6.000 kΩ	0.001 kΩ	±(0.2 % + 1)
	60.00 kΩ	0.01 kΩ	
	600.0 kΩ	0.1 kΩ	
	6.000 MΩ	0.001 MΩ	
	50.00 MΩ	0.01 MΩ	±(1.0 % + 1) [1]
nS	60.00 nS	0.01 nS	±(1.0 % + 10) [1,2]

[1] Add 0.5 % of reading when measuring above 30 MΩ in the 50 MΩ range, and 20 counts below 33 nS in the 60 nS range.

[2] When using the rel function to compensate for offsets.

Temperature (28 II Only)

Range	Resolution	Accuracy [1,2]
-200 °C to +1090 °C	0.1 °C	±(1.0 % + 10)
-328 °F to +1994 °F	0.1 °F	±(1.0 % + 18)

[1] Does not include error of the thermocouple probe.

[2] Accuracy specification assumes ambient temperature stable to ± 1 °C. For ambient temperature changes of ± 5 °C, rated accuracy applies after 2 hour.

AC Current

Function	Range	Resolution	Burden Voltage	Accuracy	
				27 II [1,2] (40 Hz – 1 kHz)	28 II [3] (45 Hz – 2 kHz)
µA ac	600.0 µA	0.1 µA	100 µV/µA	±(1.5 % + 2)	±(1.0 % + 2)
	6000 µA	1 µA	100 µV/µA		
mA ac	60.00 mA	0.01 mA	1.8 mV/mA		
	400.0 mA [4]	0.1 mA	1.8 mV/mA		
A ac	6.000 A	0.001 A	0.03 V/A		
	10.00 A [5,6]	0.01 A	0.03 V/A		

[1] AC conversion for the 27 II is ac coupled and calibrated to the rms value of a sine wave input.

[2] Below 300 counts, add 1 count and the temperature coefficient is 0.15 x (specified accuracy) / °C (>40 °C).

[3] AC conversions for the 28 II are ac coupled, true rms responding, and valid from 3 % to 100 % of range, except 400 mA range. (5 % to 100 % of range) and 10 A range (15 % to 100 % or range).

[4] 400 mA continuous. 600 mA for 18 hr maximum.

[5] ⚠ 10 A continuous up to 35 °C. <20 minutes on, 5 minutes off at 35 °C to 55 °C. >10 A to 20 A for 30 seconds maximum, 5 minutes off.

[6] >10 A accuracy unspecified.

DC Current

Function	Range	Resolution	Burden Voltage	Accuracy	
				27 II	28 II
µA dc	600.0 µA	0.1 µA	100 µV/µA	±(0.2 % + 4)	±(0.2 % + 4)
	6000 µA	1 µA	100 µV/µA	±(0.2 % + 2)	±(0.2 % + 2)
mA dc	60.00 mA	0.01 mA	1.8 mV/mA	±(0.2 % + 4)	±(0.2 % + 4)
	400.0 mA [1]	0.1 mA	1.8 mV/mA	±(0.2 % + 2)	±(0.2 % + 2)
A dc	6.000 A	0.001 A	0.03 V/A	±(0.2 % + 4)	±(0.2 % + 4)
	10.00 A [2,3]	0.01 A	0.03 V/A	±(0.2 % + 2)	±(0.2 % + 2)

[1] 400 mA continuous; 600 mA for 18 hr maximum.

[2] ⚠ 10 A continuous up to 35 °C. <20 minutes on, 5 minutes off at 35 °C to 55 °C. >10 A to 20 A for 30 seconds maximum, 5 minutes off.

[3] >10 A accuracy unspecified.

Capacitance

Range	Resolution	Accuracy
10.00 nF	0.01 nF	±(1.0 % + 2) [1]
100.0 nF	0.1 nF	
1.000 µF	0.001 µF	±(1.0 % + 2)
10.00 µF	0.01 µF	
100.0 µF	0.1 µF	
9999 µF	1 µF	

[1] With a film capacitor or better, using the rel mode to zero residual.

Diode

Range	Resolution	Accuracy
2.000 V	0.001 V	±(1.0 % + 1)

Frequency

Range	Resolution	Accuracy
199.99 Hz	0.01 Hz	±(0.005 % + 1) [1]
1999.9 Hz	0.1 Hz	
19.999 kHz	0.001 kHz	
199.99 kHz	0.01 kHz	
>200 kHz	0.1 kHz	Unspecified

[1] From 0.5 Hz to 200 kHz and for pulse widths >2 µs.

Frequency Counter Sensitivity and Trigger Levels

Input Range	Minimum Sensitivity (RMS Sine Wave)		Approximate Trigger Level (DC Voltage Function)
	5 Hz – 20 kHz	0.5 Hz – 200 kHz	
600 mV dc	70 mV (to 400 Hz)	70 mV (to 400 Hz)	40 mV
600 mV ac	150 mV	150 mV	-
6 V	0.3 V	0.7 V	1.7 V
60 V	3 V	7 V (≤140 kHz)	4 V
600 V	30 V	70 V (≤14.0 kHz)	40 V
1000 V	100 V	200 V (≤1.4 kHz)	100 V

Duty Cycle (Vdc and mVdc)

Range	Accuracy
0.0 % to 99.9 % [1]	Within ± (0.2 % per kHz + 0.1 %) for rise times < 1 µs.

[1] 0.5 Hz to 200 kHz, pulse width >2 µs. Pulse width range is determined by the frequency by the frequency of the signal.

Input Characteristics

Function	Overload Protection	Input Impedance (nominal)	Common Mode Rejection Ratio (1 kΩ unbalance)	Normal Mode Rejection
V̅	1000 V rms	10 MΩ <100 pF	> 120 dB at dc, 50 Hz or 60 Hz	> 60 dB at 50 Hz or 60 Hz
mV̅	1000 V rms		> 120 dB at dc, 50 Hz or 60 Hz	> 60 dB at 50 Hz or 60 Hz
Ṽ	1000 V rms	10 MΩ < 100 pF (ac-coupled)	> 60 dB, dc to 60 Hz	

		Open Circuit Test Voltage	Full Scale Voltage		Typical Short Circuit Current					
			To 6 MΩ	5 MΩ or 60 nS	600 Ω	6 kΩ	60 kΩ	600 kΩ	6 MΩ	50 MΩ
Ω	1000 V rms	<2.8 V dc	<850 mV dc	<1.3 V dc	500 µA	100 µA	10 µA	1 µA	0.2 µA	0.1 µA
⊣▶⊢	1000 V rms	<2.8 V dc	2.200 V dc		1.0 mA typical					

MIN MAX Recording

Nominal Response	Accuracy	
	27 II	**28 II**
100 ms to 80 %	Specified accuracy ±12 counts for changes >200 ms in duration (±40 counts in ac with beeper on)	
100 ms to 80 % (dc functions)		Specified accuracy ±12 counts for changes >200 ms in duration
120 ms to 80 % (ac functions)		Specified accuracy ±40 counts for changes >350 ms and inputs >25 % of range
250 µs (peak) [1]		Specified accuracy ±100 counts for changes >250 µs in duration (add ±100 counts for readings over 6000 counts) (add ±100 counts for readings in Low Pass mode)

[1] For repetitive peaks: 1 ms for single events.