Streamline Series Vector Network Analyzer (B-models)

Compact form. Zero compromise

Introduction

The freedom of portable network analysis doesn't have to mean a compromise in performance. The B-models of the Keysight Streamline Series VNAs unlock the full performance of the network analyzer hardware with fast measurements over Thunderbolt 3 connections to your host PC. Gain confidence in your measurements with superior performance offering fast, reliable, and repeatable results. Explore the complete characterization of your devices with a rich portfolio of software applications that transform the compact network analyzer into a complete RF measurement solution.

This configuration guide describes standard configurations, options, accessories, upgrade kits and compatible peripherals for the Keysight Streamline Series Vector Network Analyzer (VNA).

KEYSIGHT

Table of Contents

Streamline Series VNA Configurations 3

P93xxB Series Configurations 3

P50xxB Series Configurations 4

Streamline Series VNA Accessories 6

Measurement Application Software 9

Keysight Software Licensing Options Provide Flexibility and Support 23

Upgrade Your System 25

Direct Receiver Access (DRA) Configurations 25

Measurement Accessories 26

System Requirements 44

Literature Information 45

Web Resources 45

Streamline Series VNA Configurations

This section describes standard configurations, options, accessories, upgrade kits and compatible peripherals for the Keysight Streamline Series Vector Network Analyzer (VNA). All VNA documentation is available on the product page at: www.keysight.com/find/usb-vna.

P93xxB Series Configurations

Model number [1, 2, 3]	Description	Test port connectors
P9370B	9 kHz to 4.5 GHz, 2-port	3.5 mm (f)
P9371B	9 kHz to 6.5 GHz, 2-port	3.5 mm (f)
P9372B	9 kHz to 9 GHz, 2-port	3.5 mm (f)
P9373B	9 kHz to 14 GHz, 2-port	3.5 mm (f)
P9374B	9 kHz to 20 GHz, 2-port	3.5 mm (f)
P9375B	100 kHz to 26.5 GHz, 2-port	3.5 mm (f)
P9377B	100 kHz to 44 GHz, 2-port	2.4 mm (f)
P9382B	9 kHz to 9 GHz, 4-port	3.5 mm (f)
P9384B	9 kHz to 20 GHz, 4-port	3.5 mm (f)

1. P93xxB Series VNAs include Thunderbolt 3 cable assembly for connection with a host PC (800-mm, P/N: 8121-3588), power supply (external AC-DC adapter. P/N: 0950-6128 for P937xB, or P/N: 0950-6166 for P938xB), and power cord.
2. Option 001 (VNA activation software) enables basic VNA functionalities of P937xB and P938xB. Option 001 is mandatory at the time of purchase.
3. There are no test set options for P937xB or P938xB Series.

P9374B (2-port)

P9384B (4-port)

Calibration option

Option number	Description	Additional information
Option 1A7	ISO 17025 compliant calibration	Provides a complete set of measurements which tests the unit to manufacturer's published specifications. Includes calibration label, ISO 17025 calibration certificate and data report, and measurement uncertainties and guardbands on all customer specifications. Conforms to ISO 17025 and ISO 9001.

P50xxB Series Configurations

Model number [1]	Description	Test port connectors
P500xB Series (2-port)		
P5000B	9 kHz to 4.5 GHz, 2-port	3.5 mm (f)
P5001B	9 kHz to 6.5 GHz, 2-port	3.5 mm (f)
P5002B	9 kHz to 9 GHz, 2-port	3.5 mm (f)
P5003B	9 kHz to 14 GHz, 2-port	3.5 mm (f)
P5004B	9 kHz to 20 GHz, 2-port	3.5 mm (f)
P5005B	100 kHz to 26.5 GHz, 2-port	3.5 mm (f)
P5006B	100 kHz to 32 GHz, 2-port	2.4 mm (f)
P5007B	100 kHz to 44 GHz, 2-port	2.4 mm (f)
P5008B	100 kHz to 53 GHz [2], 2-port	1.85 mm (f)
P502xB Series (4 or 6-port) [3]		
P5020B	9 kHz to 4.5 GHz, 4 or 6-port	3.5 mm (f)
P5021B	9 kHz to 6.5 GHz, 4 or 6-port	3.5 mm (f)
P5022B	9 kHz to 9 GHz, 4 or 6-port	3.5 mm (f)
P5023B	9 kHz to 14 GHz, 4 or 6-port	3.5 mm (f)
P5024B	9 kHz to 20 GHz, 4 or 6-port	3.5 mm (f)
P5025B	100 kHz to 26.5 GHz, 4-port	3.5 mm (f)
P5026B	100 kHz to 32 GHz, 4-port	2.4 mm (f)
P5027B	100 kHz to 44 GHz, 4-port	2.4 mm (f)
P5028B	100 kHz to 53 GHz [2], 4-port	1.85 mm (f)

1. P50xxB VNAs include Thunderbolt 3 cable assembly for connection with a host PC (800-mm, P/N: 8121-3588), power supply (external AC-DC adapter. P/N: 0950-6128 for P500xB, or P/N: 0950-6166 for P502xB), and power cord.
2. Frequency is settable up to 54 GHz.
3. P502xB Option 400 (> 20 GHz models) or Option 402 (all models) include one flexible control cable (P/N: M9800-61601) and one semi-rigid cable (P/N: M9800-61602) for the connection on the front panel. Both cable assemblies are included in Y1730A Option 001 (Interconnect cables for multiport configuration of 1-slot M980xA).

Test set options

Choose one of the frequency models, and one test set option for the P500xB or P502xB Series. Option 200 indicates two test ports, Option 400/402 indicates four test ports and option 600 indicates six test ports. To add options to a product, order the corresponding item number (ex. P5008B-200).

Description	2-port	4-port	6-port	Additional information
For P500xB				
Option 200	X			
For P502xB				
Option 400		X		
Option 402		X		With internal second source
Option 600			X	Available up to 20 GHz

P5004B (Option 200)

P5024B (Option 400)

P5028B (Option 402)

P5024B (Option 600)

Calibration option

Option number	Description	Additional information
Option 1A7	ISO 17025 compliant calibration	Provides a complete set of measurements which tests the unit to manufacturer's published specifications. Includes calibration label, ISO 17025 calibration certificate and data report, and measurement uncertainties and guardbands on all customer specifications. Conforms to ISO 17025 and ISO 9001.

Training options

Option number	Description	Additional information
PS-S40-01	Included - instrument care and operations starter training	Provides startup training service that reduces complexity associated with initial setup and enables users to get to measurements fast. Recommended topics are product overview, system setup and initial measurements. Can be delivered remotely or on-site.
PS-S40-02	Optional - technology and measurement science standard training	Provides customized technology and measurement science training. Enable users to get deeper insights into the VNA measurement theory and applications. Recommended topics are VNA theory and applications. Can be delivered on-site or in Keysight office.
PS-S40-03	Optional - premium functional and customer specific application training	Provides an integrated training experience that fits to the users' needs on applications or workflow. Custom topics based on the user needs. Discuss the training needs with the Keysight sales representative.

Streamline Series VNA Accessories

Additional hardware

Model number	Description	Additional information
P9164A	Solid-state switch matrix module, 2x16 full crossbar, 300 kHz to 6.5 GHz	S97553B application software is required for multiport calibrated measurements [1].
P9164B	Solid-state switch matrix module, 2x16 full crossbar, 300 kHz to 9 GHz	
P9165A	Solid-state switch matrix module, 2x8 full crossbar, 300 kHz to 6.5 GHz	
P9165B	Solid-state switch matrix module, 2x8 full crossbar, 300 kHz to 9 GHz	

1. Multiport calibrated measurements with 18 GHz P9164C or P9165C switch matrix are supported but the maximum frequency is limited at 9 GHz.

Accessories

Description	For P937xB or P500xB	For P938xB or P502xB	Additional information
Rack mount kit	Y1700A-001	Y1700A-002	Order Option 001 for 2-port VNA (P937xB or P500xB Series). Order Option 002 for 4 or 6-port VNA (P938xB or P502xB Series).
Multiple instruments configuration kit	Y1701A-002 or 003 [1]	Y1701A-002 or 003 [1]	Includes interconnect cables for configurations using two VNAs [1]. Add one kit for each additional VNA.
	Y1701A-101	Y1701A-202	Includes latch kit for connecting two instruments [2].
	Y1701A-302	Y1701A-303 or 304	Includes interconnect cables for multiport configurations in a rack [3]. Add one kit for each additional VNA.
	Y1701A-400 or 401	Y1701A-400 or 401	Includes Thunderbolt 3 cable assembly with USB Type-C connectors for connection with a host PC [4].
Hard transit case	Y1710A	Y1710A	
PXI adapter module [5, 6]	Y1731A-001	Y1731A-001	Includes PXI module to enable coaxial connections with control signals of Streamline Series VNA. Equipped with twelve SMB connectors. Includes 2 flexible control cables (500 mm and 175 mm) for connection with the control port of the VNA.
SMB (f) to MCX (m) cable assembly	Y1730A-800 or 801	Y1730A-800 or 801	For connection with 10 MHz external reference ports (Ref In/Ref Out) on the front panel of the Streamline Series VNA [7]. Option 800 includes one 300-mm cable and Option 801 includes one 1000-mm cable.
BNC (f) to MCX (m) cable assembly	Y1730A-810	Y1730A-810	For connection with 10 MHz external reference ports (Ref In/Ref Out) on the front panel of the Streamline Series VNA [7].

1. Order Y1701A Option 002 for P93xxB or P50xxB Series up to 20 GHz. Order Y1701A Option 003 for greater than 20 GHz models.
2. If 2-port VNA (ex. P500xB) and 4- or 6-port VNA (ex. P502xB) Series VNAs are connected for a multiport VNA, order Y1701A Option 102 latch kit for connecting 1-slot to 2-slot instruments.
3. Order Y1701A Option 302 for 2-port VNA (P937xB or P500xB Series). Order Option 303 for P938xB or P502xA-400/600 up to 20 GHz. Order Option 304 for P502xA-400 (above 20 GHz) or P502xA-402 (all models).
4. Y1701A Option 400 includes one 500-mm cable (P/N: 8121-3587) and one retainer (P/N: P5000-29001). Option 401 includes one 800-mm cable (P/N: 8121-3588) and one retainer (P/N: P5000-29001).
5. Y1731A does not require power supply. PXI chassis is not needed for the operation.
6. Order Y1731A-800 (BNC (m) to SMB (f) cable assembly, 1000 mm) for connection with BNC connectors on external peripherals (ex. pulse generators)
7. Using 10 MHz reference ports (10 MHz In/Out) on the rear panel of the Streamline Series VNA is not supported.

Rack mount kit for Keysight Streamline Series products (Y1700A Option 001)

Multiple instruments configuration kit (Y1701A)

Transit case for Keysight Streamline Series products (Y1710A)

Test cables

Option number	Description	Additional information
Y1740A-100	Cable Assembly, 3.5 mm (m) to 3.5 mm (m), 26.5 GHz, 36 inches	
Y1740A-200	Cable Assembly, 2.92 mm (m) to 2.92 mm (m), 40 GHz, 36 inches	
Y1740A-300	Cable Assembly, 2.4 mm (m) to 2.4 mm (m), 50 GHz, 36 inches	
Y1740A-310	Cable Assembly, 2.4 mm (m) to 2.92 mm (m), 40 GHz, 36 inches	
Y1740A-400	Cable Assembly, 1.85 mm (m) to 1.85 mm (m), 67 GHz, 1 m	

Cable assembly with 2.4-mm male connectors (Y1740A-300)

Measurement Application Software

Description [1]	For P937xB, P938xB	For P500xB, P502xB	Additional information
Automatic fixture removal	S97007B	S97007B	
Probe and fixture leakage calibration	N/A	S97008B	
Time domain analysis	S97010B	S97010B	
Enhanced time domain analysis with TDR	S97011B	S97011B	Includes all capabilities of S97010B
Real-time S-parameter and power measurement uncertainty	N/A	S97015B	Displays the measurement uncertainty dynamically (real-time) on the measurement trace.
Basic pulsed-RF measurements lite, up to 20 GHz [2]	N/A	S970240B	Available with P5000B to P5004B, or P5020B to P5024B. Subset of S970250B.
Basic pulsed-RF measurements lite, up to 53 GHz [2]	N/A	S970241B	Available with P5005B to P5008B, or P5025B to P5028B. Subset of S970251B.
Basic pulsed-RF measurements, up to 20 GHz [2]	N/A	S970250B	Available with P5000B to P5004B, or P5020B to P5024B.
Basic pulsed-RF measurements, up to 53 GHz [2]	N/A	S970251B	Available with P5005B to P5008B, or P5025B to P5028B.
Noise figure measurements with vector correction [3]	N/A	S97029B	Standard receivers are used.
Scalar mixer/converter measurements [3]	S97082B	S97082B	Provides SMC measurement class.
Vector and scalar mixer/converter measurements [3]	N/A	S97083B	Provides SMC + phase measurement class. Provides vector mixer characterization.
Embedded-LO capability [3]	N/A	S97084B	
Gain-compression measurements [3]	N/A	S97086B	
Intermodulation distortion measurements [3, 4]	N/A	S97087B	Requires Option 402 (internal second source option) or multiple instrument measurements with S97551B.
Source phase control	N/A	S97088B	Requires Option 402 (internal second source option) or multiple instrument measurements with S97551B.
Differential and I/Q device measurements [3]	N/A	S97089B	
Spectrum analysis, up to 4.5 GHz [3, 5]	N/A	S970900B	Available with P5000B or P5020B.
Spectrum analysis, up to 6.5 GHz [3, 5]	N/A	S970901B	Available with P5001B or P5021B.
Spectrum analysis, up to 9 GHz [3, 5]	N/A	S970902B	Available with P5002B or P5022B.
Spectrum analysis, up to 14 GHz [3, 5]	N/A	S970903B	Available with P5003B or P5023B.
Spectrum analysis, up to 20 GHz [3, 5]	N/A	S970904B	Available with P5004B or P5024B.
Spectrum analysis, up to 26.5 GHz [3, 5]	N/A	S970905B	Available with P5005B or P5025B.
Spectrum analysis, up to 32 GHz [3, 5]	N/A	S970906B	Available with P5006B or P5026B.
Spectrum analysis, up to 44 GHz [3, 5]	N/A	S970907B	Available with P5007B or P5027B.
Spectrum analysis, up to 53 GHz [3, 5]	N/A	S970908B	Available with P5008B or P5028B.

Description [1]	For P937xB, P938xB	For P500xB, P502xB	Additional information
Active hot parameters, restricted to 50 GHz	N/A	S97111B	Requires Option 402 or multiple instruments measurements with S97551B.
True-mode stimulus	N/A	S97460B	Requires Option 402 or multiple instruments measurements with S97551B.
Multiple instruments/modules measurements	S97551B	S97551B	Provides multiport calibrated measurements using two Streamline Series VNAs. [6, 7, 8]
Multiport calibration assistant	S97552B	S97552B	Provides a tool to flexibly define cal sets of multiport measurements. Requires one ECal module.
Multiport calibrated measurements with switch instruments	S97553B	S97553B	Provides multiport calibrated measurements using P9164A/B or P9165A/B USB Solid-State Switch matrix [9].
Banded millimeter-wave network analysis	S97560B	S97560B	Enables the operation with frequency extenders.
Vector Network Analyzer (VNA) simulator – Standard	S94050B	S94050B	
Vector Network Analyzer (VNA) simulator - Advanced	S94051B	S94051B	Runs on your PC and simulates VNA functions including advanced features of S97xxxB software [10].
Device Measurement Expert (DMX)	S94601B	S94601B	Assists the users in setting up measurements automatically with customizable templates.
Limit assistant	S94602B	S94602B	Allows to acquire the data from the VNA, and easily generate limit masks for production tests.
Automated Measurement Expert (AMX)	S94701A, S94702A, KS8400A	S94701A, S94702A, KS8400A	A smart software solution for automated S-parameter measurements with the Streamline Series VNA. Order each software model and install in a host PC.
DisplayPort DP cable compliance test software [11, 12]	N/A	S94DPPCB	Performs automated compliance tests of USB Type-C interconnects (ex. cable assemblies, connectors, or raw cables) using 4-port VNA.
USB Type-C interconnects compliance test software [11, 12]	N/A	S94USBCB	Performs automated compliance tests of USB Type-C interconnects (ex. cable assemblies, connectors, or raw cables) using 4-port VNA.

1. Refer to “Keysight Software Licensing Options Provide Flexibility and Support” for more detail about S97xxxB licenses.
2. Enables internal pulse generators and pulse modulators on the analyzer’s source(s). Hardware options are not needed for pulsed-RF measurements.
3. Provides Frequency Offset Mode (FOM) to independently set the frequency of internal source(s) and receivers, and to configure external sources using External Device Configuration.
4. The most common method to use S97087B is to use a 4-port P502xB with the internal second source Option 402, with each built-in source generating one of the two tones. An external combiner is required to combine the tones.
5. Enables spectrum analysis and vector signal analysis using the VNA’s receivers. PathWave Vector Signal Analysis (89600 VSA) software is required for vector signal analysis. Hardware options are not needed for spectrum analysis or vector signal analysis.
6. When configuring a multiport VNA using multiple Streamline Series VNAs, Y1701A is recommended for each additional multiport interconnection.

7. P937xB and P938xB, or P500xB and P502xB can be combined in multiport configurations. P93xxB and P50xxB Series cannot be combined in multiport configurations.
8. A 4-port ECal module (ex. N4431/32/33D) is recommended for multiport measurements (n > 4).
9. Only the 4-port ECal modules (ex. N4431/32/33D) are supported for calibration with S97553B.
10. Features of S97007B, S97552B and S97553B are not supported with the S94051B.
11. Requires S97011B, KS8400B PathWave Test Automation, and KS8104B HTML5 Result Listener Plugin.
12. Supports L8990M-0LZ 20-port switch matrix to configure a multiport test system which eliminates the need for reconnections of test cables with DUT.

Automatic fixture removal (S97007B)

Many devices do not have coaxial connectors and are put in fixtures in order to measure them in a coaxial environment. Accurately removing the effects of the fixture is required to get a good measurement of the Device Under Test (DUT). This application adds a powerful application wizard to guide you through characterizing a fixture and removing it from the measurement. Devices can be single-ended or differential. Files can be saved in a variety of formats for later use in ENA, PNA, PXI VNA, Streamline Series VNA, ADS, and PLTS.

Probe and fixture leakage calibration (S97008B)

The software provides a process designed to address and correct crosstalk and leakage errors within the measurement system. As measurement systems operate at high frequencies, the potential for crosstalk increases, impacting the accuracy of measurements. With on-wafer measurement setups, probes and components are placed very close to each other, resulting in crosstalk through physical coupling. Additionally, modern DUTs often have more than two ports, leading to more complex crosstalk scenarios within the measurement setup.

Addressing these challenges requires advanced calibration techniques and models that can accurately account for and mitigate crosstalk, ensuring reliable and precise measurement results. The application maintains the integrity of high-frequency testing and supports the development of next-generation technologies.

Time domain analysis (S97010B)

This application enables the analyzer to view reflection and transmission responses in time or distance. Use time domain to tune filters, gate out the response of fixtures and cables, characterize the impedance of transmission lines and more.

Enhanced time domain analysis with TDR (S97011B)

This application enables the analyzer to perform enhanced time domain analysis for high-speed data applications. All functionalities of the S97010B are included (TDR/TDT mode). In addition, the S97011B enables more detailed measurements and evaluations, such as eye-diagram/mask modes, without adding PLTS software. Jitters and/or emphasis/equalization capabilities enables simulation of real-world signals and environment. S97011B covers up to 53 GHz bandwidth with 8.42 psec rise time. Full calibration is available and the automatic deskew ensures easy removal of fixture and probe effects. To

get the best accuracy, mechanical calibration kits or ECal with DC option (ex. N443xD or N469xD with Option 0DC) are recommended.

Real time S-parameter and power measurement uncertainty (S97015B)

This application provides uncertainties for both S-parameter and power measurements on the P50xxB. The real-time display of the uncertainty associated with power and S-parameter traces increases the confidence in the reproducibility of measurements. This allows users to implement pass/fail tests easily because now the instrument quantifies the gray region that is in between a full pass or a full fail, apply more realistic limit lines which can increase the production yield and reduce the defect percentage on the finished products. This application easily establishes a metric to quantify the quality of the measurement process, so your company's quality control procedures are simplified. It includes the uncertainty information for most Keysight calibration kits and provides national metrology institute traceability through Keysight's calibration kits. This application also helps you to include uncertainty information for your product's specifications and data sheets.

Multi-site measurement configurations are not supported with the S97015B.

Basic pulsed-RF measurements lite (S970240B/S970241B)

This application enables internal pulse generators of P500xB or P502xB Series that can be used to control the internal pulse modulators, and it provides an integrated pulse application that uses the wideband-detection method.

S97024xB provides an easy way to set up point-in-pulse measurements with pulse width as narrow as 50 µs, and pulse-profile measurements with 1 µs minimum timing resolution. Using the built-in pulse modulators, P50xxB Series VNAs are complete pulsed-RF measurement solutions, eliminating the need for external test sets and pulse generators. S97024xB also controls external pulse generators and modulators and can synchronize to external master pulses. Y1731A I/O Adapter Module is recommended if using external master pulses or external pulse modulators.

S970240B is available with P50xxB up to 20 GHz (20 GHz models or less), and S970241B is available for P50xxB greater than 20 GHz. Hardware options are not needed for pulsed-RF measurements with P50xxB.

S97024xB is a subset of S97025xB, so they should not be installed together.

Basic pulsed-RF measurements (S970250B/S970251B)

This application enables internal pulse generators that can be used to control the internal pulse modulators, and it provides an integrated pulse application that uses the wideband-detection method.

S97025xB extends the capabilities of S97024xB and provides an easy way to set up point-in-pulse measurements with pulse width as narrow as 200 ns, and pulse-profile measurements with 40 ns minimum timing resolution. Using the built-in pulse modulators with pulse width as narrow as 1 µs, the P50xxB Series VNAs are complete pulsed-RF measurement solutions, eliminating the need for external test sets and pulse generators. Examples of pulse modulation shapes with 1 µs and 100 µs pulse width using the internal pulse modulators are included in P50xxB data sheet (3121-1235). S97025xB also controls external pulse generators and modulators and can synchronize to external master pulses. Y1731A PXI Adapter Module is recommended to access pulse signals with SMB connectors if using external master pulses or external pulse modulators.

S970250B is available with P50xxB up to 20 GHz (20 GHz models or less), and S970251B is available for P50xxB greater than 20 GHz. Hardware options are not needed for pulsed-RF measurements with P50xxB.

Noise figure measurements with vector correction (S97029B)

This software application enables high-accuracy noise figure and noise-power measurements of amplifiers, frequency converters, and mixers, utilizing Keysight's unique vector-source-correction technique that uses Keysight N469xD series ECal module as a source-impedance tuner [1] to remove the effects of imperfect system-source match. This approach yields accuracy that surpasses that provided by the Y-factor method and other cold-source implementations, especially for in-fixture, on-wafer, and automated-test environments. S97029B controls N469xD Series ECal modules configured as impedance tuners for use with the P50xxB Series VNA.

A scalar-calibrated method is also available that offers less accuracy but is faster and does not require an impedance tuner. This method requires an external switch to isolate the P50xxB's source signal during noise figure measurements. A 50 Ω load must be connected to the DUT's input using the external switch.

The instrument's standard receivers are used for noise figure measurements with the S97029B. An external preamplifier, filter(s) and switches are required for devices with < 30 dB of excess noise (gain plus noise figure in dB) [1]. A typical block diagram of vector-calibrated noise figure measurements is shown.

1. 8509x, N443x or N755xA Series ECal modules are not supported.

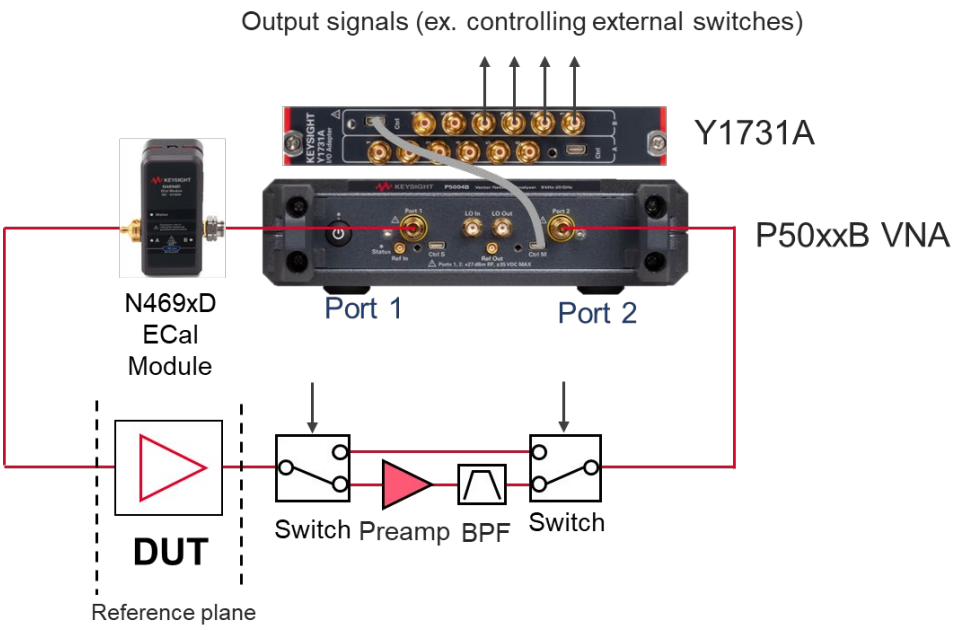

For calibration, a standard mechanical cal kit or ECal module is required for the S-parameter portion of the cal (an ECal used as a tuner cannot be shared for calibration). To calibrate a standard receiver for noise figure measurements, a power meter/sensor is required. A 346-serires noise source (Keysight 346C or 346C-K01 recommended) can be used for noise calibration of the instrument's receiver, when a preamplifier is located before the receiver. All calibration accessories and external hardware must be ordered separately.

Noise figure measurements with the P50xxB are not supported below 50 MHz or above 45 GHz.

Scalar mixer/converter measurements (S97082B)

S97082B provides Frequency Offset Mode (FOM) to set the frequency of the VNA's internal source independently from where the receivers are tuned, and to configure external sources using External Device Configuration. This functionality is also included with S97029/083/084/086/087/089/090xB.

With a simple setup and calibration, this application delivers the highest accuracy for scalar conversion-loss/gain measurements by combining one-port and power-meter calibrations to remove mismatch errors. S97082B provides an intuitive and easy-to-use user interface for setting up mixer and converter measurements, with single or dual conversion stages. It can control external signal generators for use as LO signals. Supported external sources include the Keysight ESG, PSG, EXG, and MXG Series, as well as other SCPI-controlled signal generators. FOM is required for hardware triggering with external sources.

S97082B is compatible with S97084B, which enables measurements of converters with internal LOs.

Vector and scalar mixer/converter measurements (S97083B)

This application includes the scalar mixer/converter plus phase (SMC+Phase) measurement class that provides fully calibrated conversion gain/loss, relative phase, and absolute group delay measurements of mixers and converters without the need for reference or calibration mixers. Eliminating the calibration mixer requires a U9391C/F/G comb generator [1] and an external DC power supply capable of sourcing +15 V and 300 mA for U9391C/F or 800 mA for U9391G. A macro-based series-reference-mixer version of VMC is also included for measuring the phase difference between multiple paths or devices, or for measuring phase shifts within the frequency-converting device. The macro also supports characterization of the calibration mixer that is supplied by the user.

SMC+Phase with the S97083B provides an intuitive and easy-to-use user interface for setting up mixer and converter measurements, with single or dual conversion stages. It can control the analyzer's built-in source as well as external signal generators for use as LO signals. Supported external sources include the Keysight ESG, PSG, EXG, and MXG Series, as well as other SCPI-controlled signal generators. S97083B is a superset of S97082B, so they should not be installed together.

S97083B is compatible with S97084B, which enables measurements of converters with internal LOs.

1. When a comb generator is used as a phase reference for calibration and the start frequency of the measurement is less than 630 MHz, a user-supplied calibration mixer is required.

Embedded LO capability (S97084B)

This application tunes the analyzer's receivers to the output frequency of the converter under test without the need for access to internal LOs or a common reference signal. S97084B is intended to work with S97082B and S97083B measurement applications.

Gain compression measurements (S97086B)

The Gain Compression Application (GCA) provides input power, output power, gain, and phase at the compression point of an amplifier or frequency converters, over a specified frequency range. GCA's SMART Sweep is very fast and easy-to-use. GCA also includes a guided calibration that corrects for absolute power levels, frequency response, and mismatch errors.

Intermodulation distortion measurements (S97087B)

The Intermodulation Distortion (IMD) application makes it very easy to set up and calibrate swept-IMD measurements of both amplifiers and frequency converters. It controls the frequency and power of internal and external sources and tunes the receivers to the main tones as well as the IMD products in a single measurement channel. You can sweep either the center frequency of the two stimulus signals, the frequency spacing of the two stimulus signals about a fixed center frequency, or the power of one or both

stimulus signals or the power of the LO signal. The analyzer can measure intermodulation distortion products of order 2, 3, 5, 7, or 9, and can display the associated intercept points.

A 4-port P502xB with the internal second source option 402 is recommended for IMD measurements with each built-in source generating one tone. The most common method with the P50xxB is to use two reference receivers for power leveling – the first tone signal (f1) is measured with the VNA's one receiver (ex. a1 receiver of port 1), and the second tone signal (f2) is measured with another receiver (ex. a3 receiver of port 3). Alternatively, two cascaded Streamline Series VNAs can be used, with each one generating one of the tones. This scenario requires the S97551B multiple instrument measurements software. An external combiner is required in either case. Any of the remaining VNA ports can be used as the receive port.

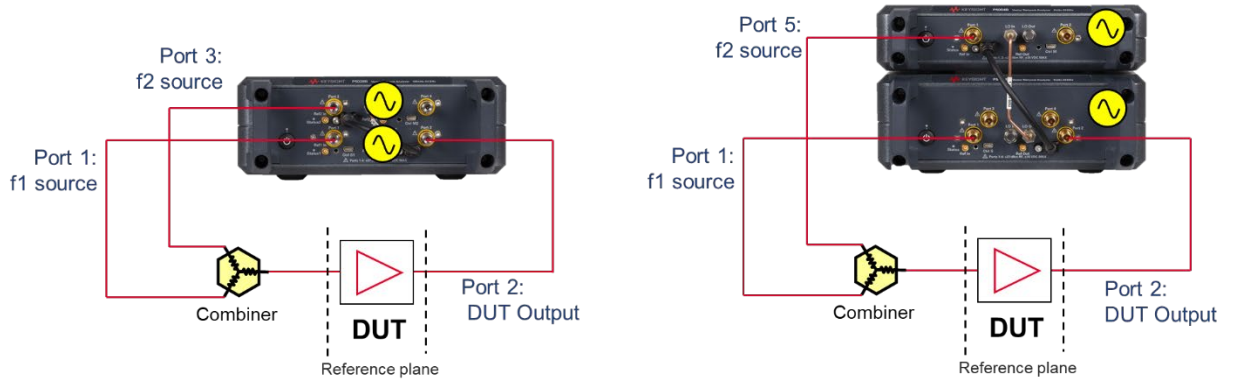

Configuration using a 4-port P502xB (left), 6-port configuration using 2-port P500xB and 4-port P502xB (right).

Source phase control (S97088B)

This application allows users to set calibrated, arbitrary phase differences between two internal sources with the P502xB's option 402 (internal second source option), or multiple instrument measurements using two P50xxB VNAs with S97551B. The phase difference can be fixed or swept between two specified phase values. S97088B also controls the relative power level between the sources using the receiver-leveling feature. S97088B is targeted for active-load control, where the analyzer provides a precise, electronically settable impedance to the output port of a device, while gain and output power are measured. This capability can be combined with external load-pull software to create traditional load-pull power contours.

Differential and I/Q device measurements (S97089B)

In systems with a single source, the S97089B software can be used to characterize the harmonics of an active device, such as an amplifier. The source is set to the fundamental frequency and the receivers can easily be set to a multiple to measure the fundamental (x1), second (x2), third (x3), or higher harmonics. Power sweeps can be used to characterize the harmonic levels versus power.

In systems with more than one source, the S97089B combines source-phase control of the internal or external sources with frequency-offset mode, enabling simplified test of I/Q modulators/converters and

differential mixers, and harmonic measurements of differential amplifiers. The phase difference between sources can be fixed (for example, at 90 or 180 degrees), or swept between two specified phase values. Providing accurate control of the relative phase between sources eliminates the need for hybrid couplers and baluns to create quadrature or differential signals. After achieving the desired phase alignment, the instrument's receivers can be tuned to all frequencies needed to characterize the DUT. On an I/Q modulator for example, measurements can be made of both the desired and suppressed conversion bands, along with LO leakage, harmonics and other spurious signals. Phase sweeps can be used to determine a DUT's phase imbalance versus frequency.

In all cases, users can specify measurements with individual receivers or multiple receivers combined with a wide range of mathematical operators. Power measurements can employ match correction for increased accuracy.

Spectrum analysis (S97090xB)

The Spectrum Analyzer (SA) application adds high-performance microwave spectrum analysis to the P50xxB. With fast stepped-FFT sweeps resulting from optimized data processing, the SA application provides quick spurious searches over broad frequency ranges. Simultaneous spectrum measurements can be done using test and reference receivers. This multi-channel SA can be used with the internal swept-signal generators for efficient measurements of spurious signals emanating from mixers and frequency converters. The SA application employs source-power and receiver-response calibration as well as fixture de-embedding, providing in-fixture and on-wafer spectrum measurements with the highest level of accuracy. Accurate and fast Noise Power Ratio (NPR) measurement capability is also included in this software application. It provides the ability of setting up and controlling of external signal generator/arbitrary waveform generators and performing the calibration of the flatness of a wideband signal and distortion signals in notches and achieving very fast NPR measurements. Optional external attenuators should be connected to the VNA's test ports to avoid receiver compression when measuring large signals.

The upper frequency range of the SA application is determined by the installed SA license or the stop frequency of the instrument, whichever is smaller. There are several frequency choices intended for standalone instruments: S970900B to 4.5 GHz, S970901B to 6.5 GHz, S970902B to 9 GHz, S970903B to 14 GHz, S970904B to 20 GHz, S970905B to 26.5 GHz, S970906B to 32 GHz, S970907B to 44 GHz, and S970908B to 53 GHz.

Active hot parameters (S97111B)

Active hot parameters software allows the analyzer a more accurate method for testing Hot S-parameter, gain, and output power than traditional methods by utilizing the X-parameter technology.

It removes active device and system interaction to precisely calculate the active parameters and output power into a nominal 50 Ω environment. The advanced theory removes system-to- system correlation problems. S97111B also provides key parameters of optimal load for maximum power, maximum power delivered to optimal load, and the DUT's fundamental X-parameters. Total 14 traces (parameters) are

available with various sweep types, such as frequency sweep, power sweep, or two-dimensional frequency and power sweep.

S97111B software requires the P502xB with option 402 (internal second source option), or multiple instrument measurements using two P50xxB VNAs with S97551B.

True-mode stimulus (S97460B)

The application provides mismatch-corrected true-mode (true differential mode and true common mode) stimulus and enables accurate balanced measurements under real operating conditions. It also provides balanced measurements with forward-only sweeps, reverse-only sweeps, and frequency or power sweeps with arbitrary phase and amplitude offsets.

S97460B works on the P502xB with Option 402 (internal second source option), or multiple instrument measurements using two P50xxB VNAs with S97551B.

Multiple instruments/modules measurements (S97551B)

Keysight Streamline Series VNA offers a capability to extend the number of ports for your measurements by using up to two VNA instruments. The instruments may be identified as one VNA by the firmware on an external host PC. At least one VNA instrument connected to your PC must have one S97551B license to maintain multiport capabilities with multiple instruments.

The frequency of the multiport array is determined by the lowest frequency instrument configured in the array. For example, a 6-port analyzer configuration using a P9372B (9 GHz) and a P9384B (20 GHz) would have a maximum frequency of 9 GHz when performing 6-port measurements. This behavior extends to other measurement application software (S97xxxB). A 4-port analyzer configuration using a P5002B (9 GHz) without SA software and P5004B (20 GHz) with S970904B (SA software up to 20 GHz) would have a maximum frequency of 9 GHz for S-parameter and SA measurements. In a multiport configuration, only one instrument must have a valid license for these capabilities to function in multiport mode.

Each instrument is connected into the array with Keysight cables. A Y1701A Multiple USB instruments configuration kit must be ordered separately for connection of two 2-port VNA (P937xB or P500xB with Y1701A Option 002) or two 4- or 6-port VNA (P938xB or P502xB with Y1701A Option 002 or 003).

While all models of P937xB and P938xB, or P500xB and P502xB Series can be connected for multiport configurations, P93xxB and P50xxB, P937xA and P93xxB, or P50xxA and P50xxB cannot be combined to configure a multiport VNA due to hardware differences.

4-port configuration using two P9377A VNAs (left), 6-port configuration using 2-port P9374B and 4-port P9384B (right).

Multiport calibration assistant (S97552B)

This application software provides a tool to flexibly create and manage cal sets for multiport measurements. For example, two cal sets with independent test ports can be combined as one cal set with a greater number of test ports. The software also offers a way to re-calibrate using a certain set of test ports to refresh the cal set.

At least one ECal module is required for the operation of S97552B.

Multiport calibrated measurements with switch instruments (S97553B)

This application provides a macro which enables full multiport error correction and measurement capabilities using external switch instruments such as the P9164A/B or P9165A/B USB Solid-state Switch Matrix [1]. The software delivers an easy-to-use measurement wizard that simplifies measurement procedures and reduces the setup time of complicated multiport measurements. Measured multiport S-parameters are displayed in the VNA viewer. Multiport calibrated measurements with S97553B are available only for standard S-parameter measurement class.

Multiport configurations using up to two P50xxB VNAs and up to two switch matrices are supported.

Only the 4-port ECal modules (ex. N4431/32/33D) are supported for multiport calibration with the S97553B.

1. Multiport calibrated measurements with 18 GHz P9164C or P9165C switch matrix are supported but the maximum frequency is limited at 9 GHz.

Banded millimeter-wave network analysis (S97560B)

This software enables P93xxB and P50xxB Streamline Series VNA to work with N5252AWxx frequency extenders or a combination of N5252APXI test set and N5262BWxx frequency extenders and allows you to configure banded millimeter-wave network analyzer up to 330 GHz.

Available bands depend on the combination of the VNA and the frequency extenders. Refer to Banded Millimeter Wave Network Analysis technical overview (literature number 5992-2177EN) for more details.

E-band VNA solution using P502xB and N5252AW frequency extenders.

Material measurements

The Keysight N1500A materials measurement suite streamlines the process of measuring complex permittivity and permeability with a vector network analyzer. Various type of measurements, such as transmission line and free space, arch reflectivity, resonant cavity, and coaxial probe are available as options. The easy-to-use software guides the user through setup and measurement, instantly converting S-parameter network analyzer data into the data format of your choice and displaying the results within seconds. Results can be charted in a variety of formats: ε_r', ε_r'', tand, μ_r', μ_r'', tand_μ, and Cole-Cole.

N1930xB Physical Layer Test System (PLTS) software

The PLTS software platform has become an has become a standard tool for calibration, measurement, and analysis of linear passive interconnects such as cables, connectors, backplanes, and printed circuit boards. Utilizing either a Vector Network Analyzer (VNA) or a Time Domain Reflectometer (TDR), fast and accurate measurements can be obtained without in-depth knowledge of microwave measurement techniques. Refer to www.keysight.com/find/plts or the technical overview (5989-6841EN) for more details.

Vector Network Analyzer (VNA) simulator (S9405xB)

VNA simulator runs on your PC and simulates operations of Keysight's latest VNAs (PNA/ENA/PXI or Streamline Series VNA), eliminating the need for a VNA for your test program development. The simulator has standard and advanced versions. The standard version (S94050B) supports operations of standard S-parameter measurement class. The advanced version (S94051B) gives access to all advanced capabilities with S97xxxB software (ex. spectrum analysis) except S97007B, S97552B or S97553B software for Streamline Series VNAs.

S9405xB is available on subscription licenses only.

Device Measurement eXpert (DMX) (S94601B)

S94601B assists the users in setting up measurements automatically with customizable templates to use consistent measurement settings in different stages of design and test workflow. It supports various types of DUTs, and once the right DUT is selected, appropriate measurement parameters are listed, and the users can select the parameters of interest.

It provides intelligent algorithms that optimizes measurement setups based on instrument and DUT performance limitations and protects both the DUT and the instrument.

Limit assistant (S94602B)

S94602B allows the users to acquire the data from a VNA or data file in csv, s2p or prn format and easily generate limit masks for complex limit test conditions with an intuitive and convenient graphical interface for production test applications.

Automated Measurement Expert (AMX)

This software package is a smart software solution for automated S-parameter measurements with the Streamline Series VNA. The S94701A AMX test plan builder provides an interactive GUI which helps you edit your DUT test plans and generate test sequence files for the network analyzers. The S94702A and KS8400A software running on a host PC executes the test sequences according to the optimized test sequence files generated by the S94701A.

A 4-port ECal module (i.e. N4431D or N4433D) is recommended for calibration wizard.

DisplayPort DP cable compliance test software (S94DPPCB)

This application software provides a fast and automated way to characterize and debug DisplayPort and DP Alt Mode on USB Type-C cable assemblies on UHBR, HBR, and RBR speed rate technologies. It performs compliance test automation with a 4-port VNA and generates a comprehensive test report including test limits, margins, and pass/fail status of each test parameter. The test plans performed by the

S94DPPCB compliance test software is based on the latest DisplayPort and DP Alt Mode Compliance Test Specification (CTS) by Video Electronics Standards Association (VESA).

S94DPPCB supports multiport configurations using a 4-port VNA and L8990M-0LZ (e.g. 20-port switch matrix), which fully automates the test procedure and dramatically reduces the test time by eliminating manual cable reconnections.

S94DPPCB requires S97011B, KS8400B PathWave Test Automation and KS8401B HTML5 Result Listener Plugin.

Refer to www.keysight.com/find/S94DPPCB for more details.

USB Type-C interconnects compliance test software (S94USBCB)

This application software provides a fast and automated way to characterize and debug USB Type-C interconnect products such as cable assemblies, connectors, or raw cables on USB4, USB 3.2, USB 3.1, and USB 2.0 technologies. It allows to automatically execute compliance tests with a 4-port VNA based on the latest USB Type-C Compliance Test Specification (CTS) by USB-IF, and displays the comprehensive test results including test limits, margins, and pass/fail status of each test parameter.

S94USBCB supports multiport configurations using a 4-port VNA and L8990M-0LZ (e.g., 20-port switch matrix), which fully automates the test procedure and dramatically reduces the test time by eliminating manual cable reconnections.

S94USBCB requires S97011B, KS8400B PathWave Test Automation and KS8401B HTML5 Result Listener Plugin.

Refer to http://www.keysight.com/find/S94USBCB or S94USBCB USB Type-C Interconnects Compliance Software data sheet (literature number 3122-1253) for more details.

PathWave Vector Signal Analysis (89600 VSA) software

PathWave VSA software is a comprehensive set of tools for demodulation and vector signal analysis. Supporting P500xB or P502xB, the software provides the flexibility and sophisticated measurement tools essential to find and fix signal problems. The multi-channel measurement capability with the P50xxB VNA can configure, execute and display multiple measurements simultaneously to characterize numerous signals. Powerful display tools enable comparisons and correlation of results from different measurements.

S97090xB spectrum analysis software and PathWave Vector Signal Analysis (89600 VSA) software are required to enable vector signal analysis using the P50xxB. The maximum bandwidth of the P50xxB is 29 MHz. To synchronize to external vector signal generators, Y1730A-800/801/810 cables are recommended for connection with 10 MHz external reference ports (Ref In/Ref Out) of the P50xxB.

Refer to www.keysight.com/find/89600 to learn more about 89600 VSA software.

Keysight Software Licensing Options Provide Flexibility and Support

Projects ramp up and down, teams grow and shrink, and projects move location. In such a dynamic environment, you need flexible licensing options that allow you to balance your project's requirements. Whether your software will be a staple for years to come or you have a short-term need for a leading-edge measurement application, Keysight's licensing puts you in charge.

Choose your term. Choose your type. Keep control of your budget.

- Select a node-locked license type.
- Select a subscription or perpetual license term, depending on how long you need to use the software.
- Each license is sold with a KeysightCare software support subscription which provides technical support with ensured response time, proactive software updates and enhancements.

Choose a license term and type that best suits your requirements from the table below.

License term [1]

License term	Options
Perpetual	Perpetual licenses can be used indefinitely.
Subscription	Licenses can be used through the term of the subscription (6, 12, 24, or 36 month)

License type

License type	Descriptions
Node locked [2]	License can be used on one specified instrument.

1. For S97xxxB software, the fixed-perpetual with a 12/24/36/60-months, support subscription is the only license type that can be ordered as part of the instrument and installed. The other license types for S97xxxB software must be ordered separately and installed from the web after the receipt of the instrument.
2. Node-locked licenses is the only license type for S97xxxB.

KeysightCare Software Support Subscription provides peace of mind amid evolving technologies

- Ensure your software is always current with the latest enhancements and measurement standards.
- Gain additional insight into your measurement problems with live access to our team of technical experts.
- Stay on schedule with fast turnaround times and priority escalations when you need support.

KeysightCare software support subscription

Subscription	Descriptions
KeysightCare software support	Perpetual licenses are sold with a 12 (default), 24, 36, or 60-month software support subscription. Support subscriptions may be renewed for a fee after that.
	Software subscription licenses include a software support subscription through the term of the license.

Upgrade Your System

Upgrade kits are available to add options after initial purchase. To upgrade the Streamline Series VNA, order the corresponding item number. To add application software, order the appropriate standalone mode numbers (S97xxxB).

For P500xB and P502xB Series, a complete list of upgrade kits is available on our Web site:

www.keysight.com/find/p50xxb-upgrades

For P937xB and P938xB Series, a complete list of upgrade kits is available on our Web site:

www.keysight.com/find/p93xxb-upgrades

Direct Receiver Access (DRA) Configurations

The P500xB and P502xB Series support Direct Receiver Access (DRA) configurations to allow for flexible setup of test systems by integrating with external components [1] such as booster amplifiers, attenuators, or directional couplers. This functionality combines three physical test ports of the Streamline Series VNA and defines them as a single logical port. You can perform measurements including calibration and post processing using the logical ports.

High-power S-parameters tests

One example using the DRA configuration is S-parameter measurements of high-power devices. When you need an input level higher than the analyzer's source can provide, booster amplifiers are necessary to increase the power level incident upon the DUT. However, the reference signal is measured before the

booster amplifier with a standard configuration of a 2-port VNA, and temperature drift or high reverse isolation of a booster amplifier will prevent accurate reflection measurements of the DUT's input.

A typical configuration for high-power measurements with the 4-port P502xA is shown. A 4-port VNA (ex. P938xB or P502xB with Option 400 or 402), or a 4-port VNA[2] using two 2-port VNAs (ex. P937xB or P500xB with Option 200) are needed to setup the DRA configuration on port 1. Reflected and transmitted signals of the DUT are detected with all the logical receivers, and the VNA firmware provides measured high-power S-parameters.

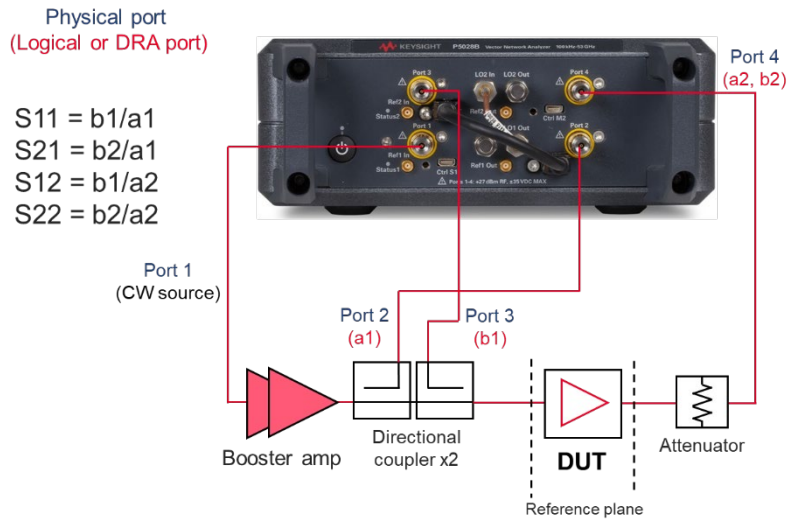

External components should be selected based on their high-power limits or frequency range specifications. Be sure that these components can handle the output power level of the booster amplifier.

1. External components are not included with Streamline Series VNA. Must be purchased separately.
2. S97551B software is required to configure a multiport VNA with two Streamline Series VNAs

Measurement Accessories

A complete list of RF and microwave test accessories is available on our Web site:
http://www.keysight.com/find/mta

Accessories are available in these connector types: 50 Ω Type-N, 3.5 mm, 7 mm, 2.4 mm, 2.92 mm, 1.85 mm, 1.0 mm, and waveguide. Test port cables and a calibration kit should be added for a complete measurement system. A verification kit is used to verify corrected system performance.

Cable and adapter sets

Keysight offers cables in the following types:

- Single cables in semi-rigid and flexible
- Cable sets in semi-rigid and flexible

There are also adapter sets available that protect the test port and convert the port to the desired connector interface. These kits contain:

- One male adapter
- One female adapter

To attain the best mechanical rigidity for device connection, use a single cable and the appropriate special adapter set. To attain the greatest flexibility for device connection, use a cable set.

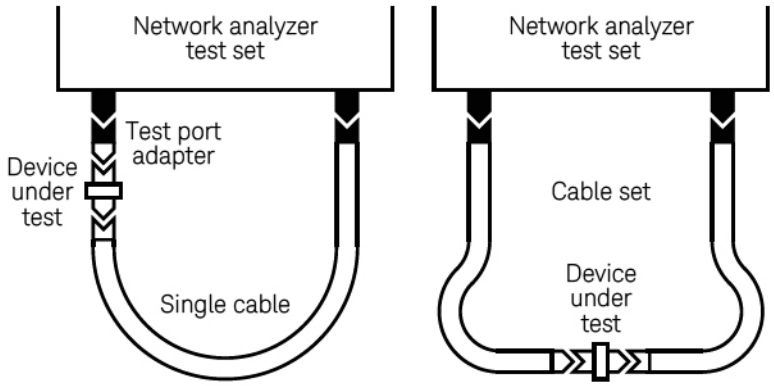

Cable and adapter sets

Coaxial measurements

Mechanical calibration kits include standards, such as opens, shorts and loads, which are measured by the network analyzer for increased measurement accuracy.

Choose a calibration kit for each connector type to be used.

Economy, includes:

- Open standards (male and female)
- Short standards (male and female)
- Fixed-termination standards (male and female)

Standard, includes the devices in the economy kit and adds:

- Sliding load standards (male and female) or a series of offset shorts

Precision, includes the devices in the economy kit and adds:

- 50 Ω airline(s) for TRL calibration
- TRL adapters

Electronic Calibration (ECal) kits replace mechanical calibration standards with one solid-state calibration module that is controlled by the network analyzer via USB, to present many different impedances to the test ports. A full two-port calibration can be performed quickly with a single connection. This technique reduces operator errors and connector wear and abrasion.

For more information about ECal modules, refer to the technical overview 5963-3743E (N4690, 85090, N4430, N7550 and N7560 Series).

Waveguide measurements

For waveguide measurements, Keysight offers mechanical calibration kits that include:

- Waveguide-to-coax adapters (X, P, K, R, Q, U, V)
- Precision waveguide section
- Flush short circuit
- Fixed terminations
- Straight section

For devices with 1.85 mm connectors

Mechanical calibration kits

85058B standard: DC to 67 GHz. Includes:

- 85058-60101 1.85 mm (m) short 5.4 mm
- 85058-60102 1.85 mm (m) short 6.3 mm
- 85058-60103 1.85 mm (m) short 7.12 mm
- 85058-60104 1.85 mm (m) short 7.6 mm
- 85058-60105 1.85 mm (f) short 5.4 mm
- 85058-60106 1.85 mm (f) short 6.3 mm
- 85058-60107 1.85 mm (f) short 7.12 mm
- 85058-60108 1.85 mm (f) short 7.6 mm
- 85058-60109 1.85 mm male open
- 85058-60110 1.85 mm female open
- 85058-60111 1.85 mm male load
- 85058-60112 1.85 mm female load
- 85058-60113 1.85 mm (m) to 1.85 mm (m) adapter
- 85058-60114 1.85 mm (f) to 1.85 mm (f) adapter
- 85058-60115 1.85 mm (m) to 1.85 mm (f) adapter

85058E economy: DC to 67 GHz. Includes:

- 85058-60101 1.85 mm (m) short 5.4 mm
- 85058-60105 1.85 mm (f) short 5.4 mm
- 85058-60109 1.85 mm male open
- 85058-60110 1.85 mm female open
- 85058-60123 1.85 mm male load
- 85058-60124 1.85 mm female load
- 85058-60113 1.85 mm (m) to 1.85 mm (m) adapter
- 85058-60114 1.85 mm (f) to 1.85 mm (f) adapter
- 85058-60115 1.85 mm (m) to 1.85 mm (f) adapter

Electronic calibration kits

N4694D Microwave ECal: DC or 10 MHz to 67 GHz, 2-ports. Includes:

- Option F0F: Both connectors are 1.85 mm female on module
- Option M0F: 1 female and 1 male 1.85 mm connector on module
- Option M0M: Both connectors are 1.85 mm male on module
- Option 0DC: DC to 67 GHz
- Option 100: 10 MHz to 67 GHz
- Option 00A adds:
  - 85058-60113 1.85 mm (m) to 1.85 mm (m) adapter
  - 85058-60114 1.85 mm (f) to 1.85 mm (f) adapter

For devices with 2.4 mm connectors

Mechanical calibration kits

85056A standard: DC to 50 GHz. Includes:

- 00901-60003 2.4 mm (m) fixed broadband load
- 00902-60004 2.4 mm (f) fixed broadband load
- 00915-60003 2.4 mm (m) sliding load
- 00915-60004 2.4 mm (f) sliding load
- 85056-60005 2.4 mm (m) to 2.4 mm (m) adapter
- 85056-60006 2.4 mm (f) to 2.4 mm (f) adapter
- 85056-60007 2.4 mm (m) to 2.4 mm (f) adapter
- 85056-60020 2.4 mm (m) short
- 85056-60021 2.4 mm (f) short
- 85056-60022 2.4 mm (m) open
- 85056-60023 2.4 mm (f) open

85056D economy: DC to 50 GHz. Includes:

- 00901-60003 2.4 mm (m) fixed broadband load
- 00902-60004 2.4 mm (f) fixed broadband load
- 85056-60005 2.4 mm (m) to 2.4 mm (m) adapter
- 85056-60006 2.4 mm (f) to 2.4 mm (f) adapter
- 85056-60007 2.4 mm (m) to 2.4 mm (f) adapter
- 85056-60020 2.4 mm (m) short
- 85056-60021 2.4 mm (f) short
- 85056-60022 2.4 mm (m) open
- 85056-60023 2.4 mm (f) open

Electronic calibration kits

N4693D Microwave ECal: DC or 10 MHz to 50 GHz, 2-ports. Includes:

- Option F0F: Both connectors are 2.4 mm female on module
- Option M0F: 1 female and 1 male 2.4 mm connector on module
- Option M0M: Both connectors are 2.4 mm male on module
- Option 0DC: DC to 50 GHz
- Option 100: 10 MHz to 50 GHz
- Option 00A adds:
  - 85056-60005 2.4 mm (m) to 2.4 mm (m) adapter
  - 85058-60006 2.4 mm (f) to 2.4 mm (f) adapter

For devices with K connectors (2.92 mm) connectors

Mechanical calibration kits

85056KE01 DC to 40 GHz

For use with user supplied 2.92 mm test port cables. 2.92 mm (K connector) calibration kit with fixed and sliding loads. The Keysight 85056KE01 calibration kit is an ordering convenience to allow the pass-through ordering from Keysight for the Maury 8770E47 calibration.

85056KE02 DC to 40 GHz

For use with user supplied 2.92 mm test ports cables. 2.92 mm (K connector) calibration kit with fixed loads only. The Keysight 85056KE02 calibration kit is an ordering convenience to allow the pass-through ordering from Keysight for the Maury 8770F47 calibration kit.

The 85056KE01 and 85056KE02 contains one NMD 2.4 mm [1] (f) to 2.92 mm (f) and one NMD 2.4 mm [1] (f) to 2.92 mm (m) test port adapter to adapt the 2.4 mm test ports of the PNA to 2.92 mm. It also supplies 2.92 mm to 2.92 mm in-series adapters (3 adapters) and a PNA Cal Coefficients on a USB stick. Users must supply their own 2.92 mm or K-connector test port cables. Also included is a 2.92 mm torque wrench.

Maury Microwave Terms and Conditions for Warranty and Return apply. Maury Microwave Corp. calibration kits are to be returned directly to Maury Microwave for service, repair, or calibration issues and not to Keysight Technologies. For additional information go to www.maurymicrowave.com. Keysight Technologies does not guarantee the performance of the Maury calibration kits or the system performance when connected to Keysight vector network analyzers.

1. Special rugged female connector specifically for connecting to the network analyzer test port but does not mate with a standard male connector.

Electronic calibration kits

N4692D Microwave ECal: DC or 10 MHz to 40 GHz, 2-ports. Includes:

- Option F0F: Both connectors are 2.92 mm female on module
- Option M0F: 1 female and 1 male 2.92 mm connector on module
- Option M0M: Both connectors are 2.92 mm male on module
- Option 0DC: DC to 40 GHz
- Option 100: 10 MHz to 40 GHz
- Option 00A adds:
  - N4692-60021 2.92 mm (m) to 2.92 mm (m) adapter
  - N4692-60022 2.92 mm (f) to 2.92 mm (f) adapter

Adapter sets

- 11904A 2.4 mm (m) to 2.92 mm (m)
- 11904B 2.4 mm (f) to 2.92 mm (f)
- 11904C 2.4 mm (m) to 2.92 mm (f)
- 11904D 2.4 mm (f) to 2.92 mm (m)
- 11904S 2.4 mm to 2.92 mm, adapter set, contains 4 matched adapters

For devices with 3.5 mm or SMA connectors

Mechanical calibration kits

85033E economy: DC to 9 GHz. Includes:

- 85033-60016 3.5 mm (m) load
- 85033-60017 3.5 mm (f) load
- 85033-60018 3.5 mm (m) open
- 85033-60019 3.5 mm (f) open
- 85033-60020 3.5 mm (m) short
- 85033-60021 3.5 mm (f) short
- 8710-1761 torque wrench
- Option 100 adds:
  - 85027-60005 3.5 mm (f) to 3.5 mm (f) adapter
- Option 200 adds:
  - 85027-60007 3.5 mm (m) to 3.5 mm (m) adapter
- Option 300 adds:
  - 85027-60006 3.5 mm (m) to 3.5 mm (f) adapter
- Option 400 adds:
  - 1250-1744 3.5 mm (f) to 50 Ω Type-N (m) adapter
  - 1250-1743 3.5 mm (m) to 50 Ω Type-N (m) adapter
  - 1250-1745 3.5 mm (f) to 50 Ω Type-N (f) adapter
  - 1250-1750 3.5 mm (m) to 50 Ω Type-N (f) adapter
- Option 500 adds:
  - 1250-1746 3.5 mm (m) to 7 mm adapter (two included)
  - 1250-1747 3.5 mm (f) to 7 mm adapter (two included)

85052B standard: DC to 26.5 GHz. Includes:

- 00902-60003 3.5 mm (m) fixed load
- 00902-60004 3.5 mm (f) fixed load
- 00911-60019 3.5 mm (m) sliding load
- 00911-60020 3.5 mm (f) sliding load
- 85052-60006 3.5 mm (m) short
- 85052-60007 3.5 mm (f) short
- 85052-60008 3.5 mm (m) open
- 85052-60009 3.5 mm (f) open
- 85052-60012 3.5 mm (f) to 3.5 mm (f) adapter
- 85052-60013 3.5 mm (f) to 3.5 mm (m) adapter
- 85052-60014 3.5 mm (m) to 3.5 mm (m) adapter

85052C precision TRL: DC to 26.5 GHz. Includes:

- 00902-60003 3.5 mm (m) fixed load
- 00902-60004 3.5 mm (f) fixed load
- 85052-60006 3.5 mm (m) short
- 85052-60007 3.5 mm (f) short
- 85052-60008 3.5 mm (m) open
- 85052-60009 3.5 mm (f) open
- 85052-60032 3.5 mm (f) to 3.5 mm (f) adapter
- 85052-60033 3.5 mm (m) to 3.5 mm (m) adapter
- 85052-60034 3.5 mm (f) to 3.5 mm (m) adapter
- 85052-60035 3.5 mm short TRL line
- 85052-60036 3.5 mm long TRL line

85052D economy: DC to 26.5 GHz. Includes:

- 00902-60003 3.5 mm (m) fixed load
- 00902-60004 3.5 mm (f) fixed load
- 85052-60006 3.5 mm (m) short
- 85052-60007 3.5 mm (f) short
- 85052-60008 3.5 mm (m) open
- 85052-60009 3.5 mm (f) open
- 85052-60012 3.5 mm (f) to 3.5 mm (f) adapter
- 85052-60013 3.5 mm (f) to 3.5 mm (m) adapter
- 85052-60014 3.5 mm (m) to 3.5 mm (m) adapter

Electronic calibration kits

85093D RF ECal, DC or 300 kHz to 9 GHz, 2-ports. Includes:

- Option 003: 300 kHz to 9 GHz
- Option 0DC: DC to 9 GHz
- Option 00A: Add 3.5 mm adapters
- Option 00F: Both 3.5 mm connectors are female on module
- Option 00M: Both 3.5 mm connectors are male on module
- Option M0F: One female and one male connector, both 3.5 mm

85093D-xxx mixed-connector options

Port A option			Port B option		
Connector type	Female	Male	Connector type	Female	Male
3.5 mm	101	102	Type-N	203	204
			7-16	205	206
			4.3-10	207	208

N4431D Microwave ECal: DC to 13.5 GHz, 4 ports. Includes:

- Option 0DC: DC to 13.5 GHz (mandatory)
- Option 010: 3.5 mm female connector on four ports on module
- Option 020: Type-N female connector on four ports on module

N4431D-xxx mixed-connector options

Connector type	Port A option	Port B option	Port C option	Port D option
Four 3.5 mm (f)			010	
Four Type-N 50 Ω (f)			020	
3.5 mm (f)	101	201	301	401
3.5 mm (m)	102	202	302	402
Type-N 50 Ω (f)	103	203	303	403
Type-N 50 Ω (m)	104	204	304	404
7-16 (f) [1]	105	205	305	405
7-16 (m) [1]	106	206	306	406
4.3-10 (f) [2]	107	207	307	407
4.3-10 (m) [2]	108	208	308	408

1. Limits ECal module high frequency to 7.5 GHz.
2. Limits ECal module high frequency to 7.5 GHz.

N4433D Microwave ECal: DC or 300 kHz to 26.5 GHz, 4 ports. Includes:

- Option 0DC: DC to 26.5 GHz
- Option 003: 300 kHz to 26.5 GHz
- Option 010: 3.5 mm female connector on four ports on module

N4433D-xxx mixed-connector options

Connector type	Port A option	Port B option	Port C option	Port D option
Four 3.5 mm (f)			010	
3.5 mm (f)	101	201	301	401
3.5 mm (m)	102	202	302	402

N4691D Microwave ECal, DC or 300 kHz to 26.5 GHz, 2-ports. Includes:

- Option F0F: Both 3.5 mm connectors are female
- Option M0F: One female and one male connector, both 3.5 mm
- Option M0M: Both 3.5 mm connectors are male
- Option 0DC: DC to 26.5 GHz
- Option 003: 300 kHz to 26.5 GHz
- Option 00A adds:
  - 85052-60012 3.5 mm (f) to 3.5 mm (f) adapter
  - 85052-60014 3.5 mm (m) to 3.5 mm (m) adapter

N755xA Economy ECal, 2-ports. Includes:

- N7550A DC to 4 GHz, 2-ports
- N7551A DC to 6.5 GHz, 2-ports
- N7552A DC to 9 GHz, 2-ports
- N7553A DC to 14 GHz, 2-ports
- N7554A DC to 18 GHz, 2-ports
- N7555A DC to 26.5 GHz, 2-ports
- Option 3FF: Both 3.5 mm connectors are female
- Option 3MF: One female and one male connector, both 3.5 mm
- Option 3MM: Both 3.5 mm connectors are male
- Option 150: Plastic storage box
- N7550X-151: 3.5 mm or 2.92 mm torque wrench

N756xA Series Multiport ECal

- N7562A: DC to 9 GHz, 3.5 mm or Type-N connectors (female), 6-ports
- N7562AEP: DC to 9 GHz, 3.5 mm or Type-N connectors (female), 12/18/24/30/36-ports
- N7564A: DC to 20 GHz, 3.5 mm connectors (female), 6-ports
- N7564AEP: DC to 20 GHz, 3.5 mm connectors (female), 12/18/24/30/36-ports

N7560X (Accessories for N756xA Multiport ECal)

- Option 001: RF semi-rigid cable
- Option 002: RF semi-rigid cable for horizontal connection
- Option 003: USB 3.0 cable Type-A and Type-C dual screw locking, 2 m
- Option 150: Plastic storage box
- Option 701: Mounting bracket
- Option 702: Bracket horizontal connection
- Option 703: Stand plate
- Option 704: RF semi-rigid cable guard

For devices with Type-N connectors

Mechanical calibration kits

85032F standard: DC to 9 GHz. Includes:

- 85032-60017 Type-N (m) fixed load
- 85032-60018 Type-N (f) fixed load
- 85032-60013 Type-N (m) open
- 85032-60014 Type-N (f) open
- 85032-60016 Type-N (m) short
- 85032-60015 Type-N (f) short
- Option 100 adds:
  - 85032-60021 Type-N (f) to Type-N (f) adapter
- Option 200 adds:
  - 85032-60019 Type-N (m) to Type-N (m) adapter
- Option 300 adds:
  - 85032-60020 Type-N (m) to Type-N (f) adapter
- Option 500 adds:
  - 85054-60001 Type-N (f) to 7 mm adapter (two included)
  - 85054-60009 Type-N (m) to 7 mm adapter (two included)

85054B standard: DC to 18 GHz. Includes:

- 00909-60011 Type-N (m) fixed low-band load
- 00909-60012 Type-N (f) fixed low-band load
- 85054-60025 Type-N (m) short
- 85054-60026 Type-N (f) short
- 85054-60027 Type-N (m) open
- 85054-60028 Type-N (f) open
- 85054-60031 Type-N (f) to 7mm adapter
- 85054-60032 Type-N (m) to 7mm adapter
- 85054-60037 Type-N (f) to Type-N (f) adapter
- 85054-60038 Type-N (m) to Type-N (m) adapter
- 85054-80010 Type-N (f) sliding load
- 85054-80009 Type-N (m) sliding load
- 85054-60050 Type-N (f) connector gage
- 85054-60052 Type-N (f) gage master
- 85054-60051 Type-N (m) connector gage
- 85054-60053 Type-N (m) gage master

85054D economy: DC to 18 GHz. Includes:

- 85054-60025 Type-N (m) short
- 85054-60026 Type-N (f) short
- 85054-60027 Type-N (m) open
- 85054-60028 Type-N (f) open
- 85054-60031 Type-N (f) to 7mm adapter
- 85054-60032 Type-N (m) to 7mm adapter
- 85054-60037 Type-N (f) to Type-N (f) adapter
- 85054-60038 Type-N (m) to Type-N (m) adapter
- 85054-60046 Type-N (m) fixed load
- 85054-60047 Type-N (f) fixed load

Electronic calibration kits

85092D RF ECal, DC or 300 kHz to 9 GHz, 2-ports. Includes:

- Option 003: 300 kHz to 9 GHz
- Option 0DC: DC to 9 GHz
- Option 00A: Add Type-N 50 Ω adapters
- Option 00F: Both Type-N 50 Ω connectors are female on module
- Option 00M: Both Type-N 50 Ω connectors are male on module
- Option M0F: One female and one male connector, both type-N 50 Ω

85092D-xxx mixed-connector options

Port A option			Port B option		
Connector type	Female	Male	Connector type	Female	Male
Type-N	103	104	3.5 mm	201	202
			7-16	205	206
			4.3-10	207	208

N4431D Microwave ECal: DC to 13.5 GHz, 4 ports. Includes:

- Option 0DC: DC to 13.5 GHz (mandatory)
- Option 010: 3.5 mm female connector on four ports on module
- Option 020: Type-N female connector on four ports on module

N4431D-xxx mixed-connector options

Connector type	Port A option	Port B option	Port C option	Port D option
Four 3.5 mm (f)			010	
Four Type-N 50 Ω (f)			020	
3.5 mm (f)	101	201	301	401
3.5 mm (m)	102	202	302	402
Type-N 50 Ω (f)	103	203	303	403
Type-N 50 Ω (m)	104	204	304	404
7-16 (f) [1]	105	205	305	405
7-16 (m) [1]	106	206	306	406
4.3-10 (f) [2]	107	207	307	407
4.3-10 (m) [2]	108	208	308	408

1. Limits ECal module high frequency to 7.5 GHz.
2. Limits ECal module high frequency to 7.5 GHz.

N4432D Microwave ECal: DC or 300 kHz to 18 GHz, 4 ports. Includes:

- Option 0DC: DC to 18 GHz
- Option 003 300 kHz to 18 GHz
- Option 020: Type-N female connector on four ports on module

N4432D-xxx mixed-connector options

Connector type	Port A option	Port B option	Port C option	Port D option
Four Type-N 50 Ω (f)			020	
3.5 mm (f)	101	201	301	401
3.5 mm (m)	102	202	302	402
Type-N 50 Ω (f)	103	203	303	403
Type-N 50 Ω (m)	104	204	304	404

N4690D Microwave ECal, DC or 300 kHz to 18 GHz, 2-ports. Includes:

- Option F0F: Both Type-N connectors are female
- Option M0F: One female and one male connector, both Type-N connectors
- Option M0M: Both Type-N connectors are male
- Option 0DC: DC to 18 GHz
- Option 003: 300 kHz to 18 GHz
- Option 00A adds:
  - 85054-60037 Type-N (f) to Type-N (f) adapter
  - 85054-60038 Type-N (m) to Type-N (m) adapter

N755xA Economy ECal, 2-ports. Includes:

- N7550A DC to 4 GHz, 2-ports
- N7551A DC to 6.5 GHz, 2-ports
- N7552A DC to 9 GHz, 2-ports
- N7553A DC to 14 GHz, 2-ports
- N7554A DC to 18 GHz, 2-ports
- Option NFF: Both Type-N connectors are female
- Option NMF: One female and one male connector, both Type-N
- Option NMM: Both Type-N connectors are male
- Option 150: Plastic storage box
- N7550X-152: Type-N torque wrench

N756xA Series Multiport ECal

- N7562A: DC to 9 GHz, 3.5 mm or Type-N connectors (female), 6-ports
- N7562AEP: DC to 9 GHz, 3.5 mm or Type-N connectors (female), 12/18/24/30/36-ports

N7560X (Accessories for N756xA Multiport ECal)

- Option 001: RF semi-rigid cable
- Option 002: RF semi-rigid cable for horizontal connection
- Option 003: USB 3.0 cable Type-A and Type-C dual screw locking, 2 m
- Option 150: Plastic storage box
- Option 701: Mounting bracket
- Option 702: Bracket horizontal connection
- Option 703: Stand plate
- Option 704: RF semi-rigid cable guard

Adapter sets

- 11853A 50 Ω Type-N accessory kit. Includes:
  - 1250-1472 Type-N (f) to Type-N (f) adapter (two included)
  - 1250-1475 Type-N (m) to Type-N (m) adapter (two included)
  - 11511A Type-N (f) short
  - 11512A Type-N (m) short
- 11878A Type-N to 3.5 mm adapter kit. Includes:
  - 1250-1744 3.5 mm (f) to 50 Ω Type-N (m) adapter
  - 1250-1743 3.5 mm (m) to 50 Ω Type-N (m) adapter
  - 1250-1745 3.5 mm (f) to 50 Ω Type-N (f) adapter
  - 1250-1750 3.5 mm (m) to 50 Ω Type-N (f) adapter
- 11524A 7 mm to Type-N (f) adapter
- 11525A 7 mm to Type-N (m) adapter
- 85130C 3.5 mm to Type-N Includes:
  - 85054-60029 3.5 mm to Type-N (f)
  - 85054-60030 3.5 mm to Type-N (m)

For devices with 7 mm connectors

Mechanical calibration kits

85050B standard: DC to 18 GHz. Includes:

- 00909-60008 7 mm coax termination
- 85050-60006 7 mm fixed broadband load
- 85050-80007 7 mm short
- 85050-80010 7 mm open
- 85050-80011 7 mm sliding load

85050C precision TRL: DC to 18 GHz. Includes:

- 00909-60008 7 mm coax termination
- 85050-60003 7 mm to 7 mm airline
- 85050-60005 7 mm to 7 mm TRL adapter
- 85050-60006 7 mm fixed broadband load
- 85050-80008 7 mm short
- 85050-80009 7 mm short with collect
- 85050-80010 7 mm open

85050D economy: DC to 18 GHz. Includes:

- 85050-60006 7 mm fixed broadband load
- 85050-80007 7 mm short
- 85050-80010 7 mm open

Electronic calibration kits

85091D RF ECal, DC or 300 kHz to 9 GHz, 7 mm, 2-ports. Includes:

- Option 003: 300 kHz to 9 GHz
- Option 0DC: DC to 9 GHz

N4696D Microwave ECal, DC or 300 kHz to 18 GHz, 7 mm, 2-ports. Includes:

- Option 0DC: DC to 18 GHz
- Option 003: 300 kHz to 18 GHz

For devices with 4.3-10 connectors

Electronic calibration kits

85094D RF ECal, DC or 300 kHz to 9 GHz, 4.3-10, 2-ports. Includes:

- Option 003: 300 kHz to 9 GHz
- Option 0DC: DC to 9 GHz
- Option 00A: Add two 4.3-10 adapters (one male-male, one female-female)
- Option 00F: Both 4.3-10 connectors are female on module
- Option 00M: Both 4.3-10 connectors are male on module
- Option M0F: One female and one male connector, both 4.3-10

85094D-xxx mixed-connector options

Port A option			Port B option		
Connector type	Female	Male	Connector type	Female	Male
4.3-10	107	108	Type-N	203	204
			7-16	205	206
			3.5 mm	201	202

For devices with 7-16 connectors

Electronic calibration kits

85098D RF ECal, DC or 300 kHz to 7.5 GHz, 7-16, 2-ports. Includes:

- Option 003: 300 kHz to 7.5 GHz
- Option 0DC: DC to 7.5 GHz
- Option 00A: Add two 7-16 adapters (one male-male, one female-female)
- Option 00F: Both 7-16 connectors are female on module
- Option 00M: Both 7-16 connectors are male on module
- Option M0F: One female and one male connector, both 7-16

85098D-xxx mixed-connector options

Port A option			Port B option		
Connector type	Female	Male	Connector type	Female	Male
7-16	105	106	Type-N	203	204
			4.3-10	207	208
			3.5 mm	201	202

For devices with waveguide

Mechanical calibration kits

X-Band

X11644A standard, WR-90: 8.2 to 12.4 GHz. Includes:

- 00896-60008 X-band standard section
- 00910-60003 X-band termination
- 11644-20018 X-band short
- 11644-20021 X-band shim
- X281C adapter (included in calibration kit): WR-90 to 7 mm

P Band

P11644A standard, WR-62: 12.4 to 18 GHz. Includes:

- 00896-60007 P-band standard section
- 00910-60002 P-band termination
- 11644-20017 P-band short
- 11644-20020 P-band shim
- P281C adapter (included in calibration kit): WR-62 to 7 mm

K Band

K11644A standard, WR-42: 18 to 26.5 GHz. Includes:

- 00896-60006 K-band standard section
- 00910-60001 K-band termination
- 11644-20016 K-band short
- 11644-20019 K-band shim
- K281C adapter (included in calibration kit): WR-42 to 3.5 mm (f) Option 012 WR-42 to 3.5 mm (m)

R Band

R11644A standard, WR-28: 26.5 to 40 GHz. Includes:

- 00914-20028 R-band termination
- 11644-20005 R-band short
- 11644-20003 R-band shim
- 11644-60001 R-band 10 cm straight waveguide
- 11644-60016 R-band 5 cm straight waveguide

Q Band

Q11644A standard, WR-22: 33 to 50 GHz. Includes:

- 11644-60005 Q-band termination
- 11644-20004 Q-band short
- 11644-20001 Q-band shim
- 11644-60002 Q-band 10 cm straight waveguide
- 11644-60017 Q-band 5 cm straight waveguide

U Band

U11644A standard, WR-19: 40 to 60 GHz. Includes:

- 11644-60006 U-band termination
- 11644-20004 U-band short
- 11644-20002 U-band shim
- 11644-60003 U-band 10 cm straight waveguide
- 11644-60018 U-band 5 cm straight waveguide

Verification kits

All Keysight verification kits include:

- Precision Z0 airline or match thru
- Mismatched airline or mismatch thru
- Fixed attenuators (except 85059V)
- Traceable measured data and uncertainties

85051B 45 MHz to 18 GHz 7 mm kit

Includes attenuators, airline, and mismatch airline with data on a USB drive for use in confirming calibrated system performance, traceable to national standards. Test procedure is provided in the service manual.

85053B 300 kHz to 26.5 GHz 3.5 mm kit

Includes attenuators, airline, and mismatch airline with data on a USB drive for use in confirming calibrated system performance, traceable to national standards. Test procedure is provided in the service manual.

85055A 300 kHz to 18 GHz Type-N kit

Includes attenuators, airline, and mismatch airline with data on a USB drive for use in confirming calibrated system performance, traceable to national standards. Test procedure is provided in the service manual.

85057B 45 MHz to 50 GHz 2.4 mm kit

Includes attenuators, airline, and mismatch airline with data on a USB drive for use in confirming calibrated system performance, traceable to national standards. Test procedure is provided in the service manual.

85058V 45 MHz to 67 GHz 1.85 mm kit

Includes attenuators, airline, and mismatch airline with data on a USB drive for use in confirming calibrated system performance, traceable to national standards. Test procedure is provided in the service manual.

CalPod calibration refresh modules (8553xB/4xB)

CalPod calibration refresh modules allow in-situ calibration refreshes to be performed at the push of a button without removing the DUT or re-connecting calibration standards. CalPods are designed for any measurement situation where it is desirable to ensure that a valid calibration is present before recording measurement data. For example, they are useful for removing environmental effects such as cable movement and thermal-based changes of cables, connectors, and adapters, as well as connector and switch-matrix repeatability errors. The modules are especially useful in temperature, or thermal-vacuum chamber testing. CalPod modules are equipped with 2.92 mm connectors.

- 85530B 20 GHz ambient-temperature CalPod
- 85531B 20 GHz temperature-compensated CalPod
- 85532B 20 GHz thermal-vacuum compatible CalPod
- 85540B 40 GHz ambient-temperature CalPod
- 85541B 40 GHz temperature-compensated CalPod
- 85542B 40 GHz thermal-vacuum compatible CalPod
- 85523B CalPod controller (provides control for up to 4 CalPods)
- 85556A CalPod drive-cable splitter (allows control for up to 12 CalPods)
- 85554A CalPod drive cable extension (10-meter cascadable extension cable)

System Requirements

Requirement	Description
PC system requirements [1]	
Operating systems	Windows 10 and Windows 11 (64-bit)
Recommended CPU	Intel Core i7 10th Generation or later recommended
Available memory	4 GB minimum, 16 GB recommended
Available disk space	4 GB minimum
Display resolution	1024 x 768 minimum
Connection with VNA	Thunderbolt 3 and Thunderbolt 4 / USB4 [2]
Instrument drivers	
Keysight IO Libraries	Keysight IO Libraries Suite 2022 Update 1 (18.2.28014.7) or later (for Windows 10) Keysight IO Libraries Suite 2023 Update 1 (18.3.29324.3) or later (for Windows 11)

1. Refer to www.keysight.com/find/VNATBTConnectivity for troubleshooting the connection of a host PC with Streamline Series VNA.
2. PCIe tunneling support is required.

Literature Information

Keysight P93xxB and P50xxB Series Vector Network Analyzer – Data Sheet, 3121-1235.EN

Keysight Vector Network Analyzer – Selection Guide, 5989-7603EN

Electric Calibration (ECal) Modules – Technical Overview, 5963-3743E

Web Resources

Keysight Streamline Series VNA - www.keysight.com/find/usb-vna

Keysight Vector Network Analyzers: www.keysight.com/find/na

Vector Network Analyzer Software: www.keysight.com/find/vnasoftware

Calibration Modules and Kits: www.keysight.com/find/ecal

Keysight enables innovators to push the boundaries of engineering by quickly solving design, emulation, and test challenges to create the best product experiences. Start your innovation journey at www.keysight.com.

This information is subject to change without notice. © Keysight Technologies, 2021 – 2025, Published in USA, July 24, 2025, 3121-1254.EN