Model 2750 Multimeter/Switch System
Service Manual

©2015, Keithley Instruments
All rights reserved.
Cleveland, Ohio, U.S.A.
Second Printing, August 2015
Document Number: 2750-902-01 Rev. B

Manual Print History

The print history shown below lists the printing dates of all Revisions and Addenda created for this manual. The Revision Level letter increases alphabetically as the manual undergoes subsequent updates. Addenda, which are released between Revisions, contain important change information that the user should incorporate immediately into the manual. Addenda are numbered sequentially. When a new Revision is created, all Addenda associated with the previous Revision of the manual are incorporated into the new Revision of the manual. Each new Revision includes a revised copy of this print history page.

Revision A (Document Number 2750-902-01) ..... March 2001
Revision B(Document Number 2750-902-01) ..... August 2015

All Keithley product names are trademarks or registered trademarks of Keithley Instruments, Inc.
Other brand names are trademarks or registered trademarks of their respective holders.

Safety Precautions

The following safety precautions should be observed before using this product and any associated instrumentation. Although some instruments and accessories would normally be used with non-hazardous voltages, there are situations where hazardous conditions may be present.

This product is intended for use by qualified personnel who recognize shock hazards and are familiar with the safety precautions required to avoid possible injury. Read the operating information carefully before using the product.

The types of product users are:

Responsible body is the individual or group responsible for the use and maintenance of equipment, for ensuring that the equipment is operated within its specifications and operating limits, and for ensuring that operators are adequately trained.

Operators use the product for its intended function. They must be trained in electrical safety procedures and proper use of the instrument. They must be protected from electric shock and contact with hazardous live circuits.

Maintenance personnel perform routine procedures on the product to keep it operating, for example, setting the line voltage or replacing consumable materials. Maintenance procedures are described in the manual. The procedures explicitly state if the operator may perform them. Otherwise, they should be performed only by service personnel.

Service personnel are trained to work on live circuits, and perform safe installations and repairs of products. Only properly trained service personnel may perform installation and service procedures.

Keithley products are designed for use with electrical signals that are rated Installation Category I and Installation Category II, as described in the International Electrotechnical Commission (IEC) Standard IEC 60664. Most measurement, control, and data I/O signals are Installation Category I and must not be directly connected to mains voltage or to voltage sources with high transient over-voltages. Installation Category II connections require protection for high transient over-voltages often associated with local AC mains connections. The user should assume all measurement, control, and data I/O connections are for connection to Category I sources unless otherwise marked or described in the Manual.

Exercise extreme caution when a shock hazard is present. Lethal voltage may be present on cable connector jacks or test fixtures. The American National Standards Institute (ANSI) states that a shock hazard exists when voltage levels greater than 30V RMS, 42.4V peak, or 60VDC are present. A good safety practice is to expect that hazardous voltage is present in any unknown circuit before measuring.

Users of this product must be protected from electric shock at all times. The responsible body must ensure that users are prevented access and/or insulated from every connection point. In some cases, connections must be exposed to potential human contact. Product users in these circumstances must be trained to protect themselves from the risk of electric shock. If the circuit is capable of operating at or above 1000 volts, no conductive part of the circuit may be exposed.

Do not connect switching cards directly to unlimited power circuits. They are intended to be used with impedance limited sources. NEVER connect switching cards directly to AC mains. When connecting sources to switching cards, install protective devices to limit fault current and voltage to the card.

Before operating an instrument, make sure the line cord is connected to a properly grounded power receptacle. Inspect the connecting cables, test leads, and jumpers for possible wear, cracks, or breaks before each use.

When installing equipment where access to the main power cord is restricted, such as rack mounting, a separate main input power disconnect device must be provided, in close proximity to the equipment and within easy reach of the operator.

For maximum safety, do not touch the product, test cables, or any other instruments while power is applied to the circuit under test. ALWAYS remove power from the entire test system and discharge any capacitors before: connecting or disconnecting cables or jumpers, installing or removing switching cards, or making internal changes, such as installing or removing jumpers.

Do not touch any object that could provide a current path to the common side of the circuit under test or power line (earth) ground. Always make measurements with dry hands while standing on a dry, insulated surface capable of withstanding the voltage being measured.

The instrument and accessories must be used in accordance with its specifications and operating instructions or the safety of the equipment may be impaired.

Do not exceed the maximum signal levels of the instruments and accessories, as defined in the specifications and operating information, and as shown on the instrument or test fixture panels, or switching card.

When fuses are used in a product, replace with same type and rating for continued protection against fire hazard.

Chassis connections must only be used as shield connections for measuring circuits, NOT as safety earth ground connections.

If you are using a test fixture, keep the lid closed while power is applied to the device under test. Safe operation requires the use of a lid interlock.

If a ⏚ screw is present, connect it to safety earth ground using the wire recommended in the user documentation.

The ⚠ symbol on an instrument indicates that the user should refer to the operating instructions located in the manual.

The ⚡ symbol on an instrument shows that it can source or measure 1000 volts or more, including the combined effect of normal and common mode voltages. Use standard safety precautions to avoid personal contact with these voltages.

The WARNING heading in a manual explains dangers that might result in personal injury or death. Always read the associated information very carefully before performing the indicated procedure.

The CAUTION heading in a manual explains hazards that could damage the instrument. Such damage may invalidate the warranty.

Instrumentation and accessories shall not be connected to humans.

Before performing any maintenance, disconnect the line cord and all test cables.

To maintain protection from electric shock and fire, replacement components in mains circuits, including the power transformer, test leads, and input jacks, must be purchased from Keithley Instruments. Standard fuses, with applicable national safety approvals, may be used if the rating and type are the same. Other components that are not safety related may be purchased from other suppliers as long as they are equivalent to the original component. (Note that selected parts should be purchased only through Keithley Instruments to maintain accuracy and functionality of the product.) If you are unsure about the applicability of a replacement component, call a Keithley Instruments office for information.

To clean an instrument, use a damp cloth or mild, water based cleaner. Clean the exterior of the instrument only. Do not apply cleaner directly to the instrument or allow liquids to enter or spill on the instrument. Products that consist of a circuit board with no case or chassis (e.g., data acquisition board for installation into a computer) should never require cleaning if handled according to instructions. If the board becomes contaminated and operation is affected, the board should be returned to the factory for proper cleaning/servicing.

Table of Contents

1 Performance Verification

Introduction 1-2
Verification test requirements 1-3
Environmental conditions 1-3
Warmup period 1-3
Line power 1-3
Recommended test equipment 1-4
Verification limits 1-5
Example reading limit calculation 1-5
Calculating resistance reading limits 1-5
Restoring factory defaults 1-6
Performing the verification test procedures 1-6
Verification test summary 1-6
Test considerations 1-7
Model 2750 verification 1-8
Verifying DC voltage 1-8
Verifying AC voltage 1-10
Verifying DC current 1-11
Verifying AC current 1-13
Verifying normal resistance 1-14
Verifying dry circuit resistance 1-16
Verifying temperature 1-18
Verifying frequency 1-20
Model 7700 verification 1-20
Verifying DC voltage 1-21
Verifying AC voltage 1-22
Verifying DC current 1-24
Verifying AC current 1-25
Verifying normal resistance 1-26
Verifying dry circuit resistance 1-28
Verifying temperature 1-31
Verifying frequency 1-34
Verifying ratio and average 1-35

2 Calibration

Introduction 2-2
Environmental conditions 2-2
Warmup period 2-2
Line power 2-2
Calibration considerations 2-3
Calibration code 2-4

Front panel calibration code 2-4
Remote calibration code 2-4
Comprehensive calibration 2-5
Calibration cycle 2-5
Recommended equipment 2-5
Aborting calibration 2-6
Front panel calibration 2-6
Remote calibration 2-14
Manufacturing calibration 2-20
Recommended test equipment 2-20
Extender board preparation 2-20
Unlocking manufacturing calibration 2-21
Measuring function generator signal amplitude 2-21
Front panel manufacturing calibration 2-21
Remote manufacturing calibration 2-22
Model 7700 calibration 2-23
Recommended test equipment 2-23
Extender board connections 2-24
Model 7700 calibration 2-24

3 Routine Maintenance

Introduction 3-2
Setting the line voltage and replacing the line fuse 3-2
Replacing the AMPS fuse 3-4
Replacing Model 7700 plug-in module amps fuses 3-5
Replacing non-volatile RAM battery 3-6
Replace the battery as follows: 3-7
Plug-in module relay closure count 3-8
Closure count commands 3-8
Reading relay closure count 3-8
Resetting relay closure count 3-9
Setting count update interval 3-9
Rack mounting 3-10
Rack mount kit 3-10
Rack mount procedure 3-10

4 Troubleshooting

Introduction 4-2
Repair considerations 4-2
Power-on self-test 4-3
Front panel tests 4-3
KEY test 4-3
DISP test 4-3
Principles of operation 4-4

Power supply 4-4
Display board 4-6
Digital circuitry 4-7
Analog circuitry 4-9
Troubleshooting 4-14
Display board checks 4-14
Power supply checks 4-14
Digital circuitry checks 4-15
Analog signal switching states 4-16
No comm link error 4-24

5 Disassembly

Introduction 5-2
Handling and cleaning 5-2
Handling PC boards 5-2
Solder repairs 5-2
Static sensitive devices 5-3
Assembly drawings 5-3
Disassembly procedures 5-4
Case cover removal 5-4
Motherboard removal 5-4
Card cage removal 5-5
Front panel disassembly 5-5
Removing power components 5-5
Instrument reassembly 5-6
Input terminal wire connections 5-6
Power module wire connections 5-7

6 Replaceable Parts

Introduction 6-2
Parts lists 6-2
Ordering information 6-2
Factory service 6-2
Component layouts 6-3

A Accuracy and Optimization

Accuracy calculations A-2
Calculating DC characteristics accuracy A-2
Calculating AC characteristics accuracy A-2
Calculating dBm characteristics accuracy A-3
Calculating dB characteristics accuracy A-3
Additional derating factors A-4
Optimizing measurement accuracy A-4

DC voltage, DC current, and resistance: A-4
AC voltage and AC current: A-4
Temperature: A-4
Optimizing measurement speed A-5
DC voltage, DC current, and resistance: A-5
AC voltage and AC current: A-5
Temperature: A-5

B Calibration Reference

Introduction B-2
Command summary B-2
Miscellaneous calibration commands B-4
DC calibration commands B-8
AC calibration commands B-13
Manufacturing calibration commands B-15
Model 7700 calibration commands B-16
Remote error reporting B-21
Error summary B-21
Error queue B-24
Status byte EAV (Error Available) bit B-25
Generating an SRQ on error B-25
Detecting calibration step completion B-25
Using the *OPC? query B-25
Using the *OPC command B-26
Generating an SRQ on calibration complete B-26

C Calibration Program

Introduction C-2
Computer hardware requirements C-2
Software requirements C-2
Calibration equipment C-2
General program instructions C-3

List of Illustrations

1 Performance Verification

Figure 1-1 Connections for Model 2750 DC volts verification 1-9
Figure 1-2 Connections for Model 2750 AC volts verification 1-10
Figure 1-3 Connections for Model 2750 DC current verification 1-12
Figure 1-4 Connections for Model 2750 AC current verification 1-13
Figure 1-5 Connections for Model 2750 resistance verification (1Ω to 10MΩ ranges) 1-14
Figure 1-6 Connections for Model 2750 resistance verification (100MΩ range) 1-15
Figure 1-7 Connections for Model 2750 dry circuit resistance verification 1-17
Figure 1-8 Connections for Model 2750 frequency verification 1-20
Figure 1-9 Connections for Model 7700 DC volts verification 1-21
Figure 1-10 Connections for Model 7700 AC volts verification 1-22
Figure 1-11 Connections for Model 7700 DC current verification 1-24
Figure 1-12 Connections for Model 7700 AC current verification 1-25
Figure 1-13 Connections for Model 7700 resistance verification (1Ω to 10MΩ ranges) 1-27
Figure 1-14 Connections for Model 7700 resistance verification (100MΩ range) 1-27
Figure 1-15 Connections for Model 7700 dry circuit resistance verification 1-29
Figure 1-16 Connections for Model 7700 thermocouple temperature verification 1-31
Figure 1-17 Connections for Model 7700 frequency verification 1-34
Figure 1-18 Connections for Model 7700 ratio and average verification 1-35

2 Calibration

Figure 2-1 Low-thermal short connections 2-7
Figure 2-2 Connections for DC volts and ohms calibration 2-8
Figure 2-3 Connections for DC and AC amps calibration 2-11
Figure 2-4 Connections for AC volts calibration 2-12
Figure 2-5 Function generator connections for manufacturing calibration2-22

3 Routine Maintenance

Figure 3-1 Power module 3-3
Figure 3-2 AMPS fuse 3-4
Figure 3-3 Model 7700 amps fuses 3-5
Figure 3-4 Rack preparation 3-11

4 Troubleshooting

Figure 4-1 Power supply block diagram 4-4

Figure 4-2 Digital circuitry block diagram 4-6
Figure 4-3 Analog circuitry block diagram 4-10
Figure 4-4 Simplified schematic of dry circuit ohms 4-13

5 Disassembly

6 Replaceable Parts

A Accuracy and Optimization

B Calibration Reference

C Calibration Program

Figure C-1 Model 2750 calibration program C-3

List of Tables

1 Performance Verification

Table 1-1 Recommended verification equipment 1-4
Table 1-2 DCV reading limits 1-9
Table 1-3 ACV reading limits 1-11
Table 1-4 DCI limits 1-12
Table 1-5 ACI limits 1-13
Table 1-6 Limits for normal resistance verification 1-16
Table 1-7 Limits for Model 2750 dry resistance verification 1-18
Table 1-9 Four-wire RTD temperature verification reading limits 1-19
Table 1-8 Thermocouple temperature verification reading limits 1-19
Table 1-10 Plug-in module DCV reading limits 1-22
Table 1-11 Plug-in module ACV reading limits 1-23
Table 1-12 Plug-in module DCI limits 1-25
Table 1-13 Plug-in module ACI limits 1-26
Table 1-14 Limits for plug-in module normal resistance verification ... 1-28
Table 1-15 Limits for plug-in module dry circuit resistance verification 1-30
Table 1-16 Model 7700 thermocouple temperature verification reading limits 1-32
Table 1-17 Plug-in module four-wire RTD temperature verification reading limits 1-33

2 Calibration

Table 2-1 Recommended equipment for comprehensive calibration 2-5
Table 2-2 Comprehensive calibration procedures 2-7
Table 2-3 DC volts calibration summary 2-9
Table 2-4 Ohms calibration summary 2-10
Table 2-5 DC current calibration summary 2-11
Table 2-6 AC voltage calibration summary 2-12
Table 2-7 AC current calibration summary 2-13
Table 2-8 DC voltage calibration programming steps 2-16
Table 2-9 Resistance calibration programming steps 2-16
Table 2-10 DC current calibration programming steps 2-17
Table 2-11 AC voltage calibration programming steps 2-18
Table 2-12 AC current calibration programming steps 2-19
Table 2-13 Recommended equipment for manufacturing calibration ... 2-20
Table 2-14 Recommended equipment for Model 7700 calibration 2-23

3 Routine Maintenance

Table 3-1 Power line fuse 3-3
Table 3-2 Closure count commands 3-8

4 Troubleshooting

Table 4-1 Power supply components 4-5
Table 4-2 Display board checks 4-14
Table 4-3 Power supply checks 4-14
Table 4-4 Digital circuitry checks 4-15
Table 4-5 DCV signal switching 4-16
Table 4-6 ACV and FREQ signal switching 4-17
Table 4-7 Ω2 signal switching 4-18
Table 4-8 Ω4 signal switching 4-19
Table 4-9 Ω4 dry circuit signal switching 4-20
Table 4-10 Ω2/Ω4 reference signal switching 4-20
Table 4-13 ACA signal switching 4-21
Table 4-11 Ω4 dry circuit reference signal switching 4-21
Table 4-12 DCA signal switching 4-21
Table 4-14 DCV signal multiplexing and gain 4-22
Table 4-15 ACV and ACA signal multiplexing and gain 4-22
Table 4-16 DCA signal multiplexing and gain 4-22
Table 4-17 Ω2 signal multiplexing and gain 4-23
Table 4-18 Ω4 signal multiplexing and gain 4-23
Table 4-19 Ω4 dry circuit signal multiplexing and gain 4-23
Table 4-20 Switching device locations 4-24

5 Disassembly

Table 5-1 Input terminal wire colors 5-6
Table 5-2 Power module wire colors 5-7

6 Replaceable Parts

Table 6-1 Model 2750 motherboard parts list 6-3
Table 6-2 Model 2750 display board parts list 6-12
Table 6-3 Model 2750 backplane board parts list 6-13
Table 6-4 Model 2750 miscellaneous parts list 6-14
Table 6-5 Model 7700 module parts list 6-15

A Accuracy and Optimization

B Calibration Reference

Table B-1 Remote calibration command summary B-2
Table B-2 DC calibration commands B-8
Table B-3 AC calibration commands B-13
Table B-4 Model 7700 calibration commands B-16
Table B-5 Calibration errors B-21

C Calibration Program

1
Performance Verification

Introduction

Use the procedures in this section to verify that Model 2750 Multimeter/Switch System accuracy is within the limits stated in the instrument's one-year accuracy specifications. You can perform these verification procedures:

- Make sure that the instrument was not damaged during shipment, and that the unit meets factory specifications.
- If the instrument's accuracy is questionable.
- Following calibration.

WARNING The information in this section is intended only for qualified service personnel. Do not attempt these procedures unless you are qualified to do so.

NOTE *If the instrument is still under warranty and its performance is outside specified limits, contact your Keithley representative or the factory to determine the correct course of action. If the unit is not under warranty, and it fails to meet specified limits, refer to the calibration procedures in Section 2.*

There are two general verification procedures in this section:

- Model 2750 verification — Covers procedures to verify measurement accuracy of the Model 2750 using the front panel terminals.
- Model 7700 verification — Discusses procedures to verify accuracy of measurement made through the Model 7700 20-Channel Multiplexer. Note that the same general procedures can be used to verify measurement accuracy of other Model 2750 plug-in modules that have similar functions. For specific information about the individual modules, refer to the corresponding module documentation.

Verification test requirements

Be sure that you perform the verification tests:

- Under the proper environmental conditions.
- After the specified warmup period.
- Using the correct line voltage.
- Using the proper calibration equipment.
- Using the specified reading limits.

Environmental conditions

Conduct your performance verification procedures in a test environment that has:

- An ambient temperature of 18° to 28°C (65° to 82°F).
- A relative humidity of less than 80% unless otherwise noted.

Warmup period

Allow the Model 2750 to warm up for at least two hours before conducting the verification procedures.

If the instrument has been subjected to temperature extremes (those outside the ranges stated above), allow additional time for the instrument's internal temperature to stabilize. Typically, allow one extra hour to stabilize a unit that is 10°C (18°F) outside the specified temperature range.

Also, allow the test equipment to warm up for the minimum time specified by the manufacturer.

Line power

The Model 2750 requires a line voltage of 100V/120V/220V/240V, ±10% and a line frequency of 45Hz to 66Hz or 360Hz to 440Hz. Note that the line frequency is automatically sensed at powerup, but the line voltage must be manually set to either 100V/120V or 220V/240V as described in Section 3.

Recommended test equipment

Table 1-1 summarizes recommended verification equipment. You can use alternate equipment as long as that equipment has specifications at least as good as those listed in Table 1-1. In general, equipment uncertainty should be at least four times better than corresponding Model 2750 specifications. Keep in mind, however, that calibrator uncertainty will add to the uncertainty of each measurement.

Table 1-1
Recommended verification equipment

Fluke 5700A Calibrator:				
DC Voltage	AC Voltage (1kHz, 50kHz)	DC Current	AC Current (1kHZ)	Resistance
100mV:±14ppm 1.0V:±7ppm 10V:±5ppm 100V:±7ppm 1000V:±9ppm	100mV:±200ppm 1.0V:±82ppm 10V:±82ppm 100V:±90ppm 700V:±85ppm	20mA:±60ppm 100mA:±70ppm 1A:±110ppm 2.2A:±94ppm	1A:±690ppm 2.2A:±682ppm	1Ω:±95ppm 10Ω:±17ppm 100Ω:±17ppm 1kΩ:±12ppm 10kΩ:±11ppm 100kΩ:±13ppm 1MΩ:±18ppm 10MΩ:±37ppm 100MΩ:±120ppm
Fluke 5725A Amplifier:				
AC Voltage, 50kHz: 700V, ±375ppm DC Current, 3A, ±500ppm AC Current, 1kHz, 3A, ±457ppm				
Stanford Research Systems DS345 Function Generator:				
1V RMS 1kHz, ±5ppm				
General Radio 1433-T Precision Decade Resistance Box:				
10Ω to 400Ω, ±0.02%				
Miscellaneous Equipment:				
Double banana plug to double banana plug shielded cables (2) BNC to double banana plug shielded cable				

Note: The Fluke 5725A amplifier is necessary only if you wish to verify the 750V AC range at 50kHz and 3A AC and DC current ranges at 3A. Verification at 220V, 50kHz, and 2.2A on the current ranges using only the 5700A calibrator is adequate for most applications. Calibrator 1Ω uncertainty is not four times better than Model 2750 1Ω range accuracy.

Verification limits

The verification limits stated in this section have been calculated using only the Model 2750 one-year accuracy specifications, and they do not include test equipment uncertainty. If a particular measurement falls slightly outside the allowable range, recalculate new limits based on both Model 2750 specifications and pertinent calibration equipment specifications.

Example reading limit calculation

The following is an example of how reading limits have been calculated. Assume you are testing the 10V DC range using a 10V input value. Using the Model 2750 one-year accuracy specification for 10V DC of ± (30ppm of reading + 5ppm of range), the calculated limits are:

Reading limits = 10V ± [(10V × 30ppm) + (10V × 5ppm)]
Reading limits = 10V ± (0.0003 + 0.00005)
Reading limits = 10V ± 0.00035V
Reading limits = 9.99965V to 10.00035V

Calculating resistance reading limits

Resistance reading limits must be recalculated based on the actual calibration resistance values supplied by the equipment manufacturer. Calculations are performed in the same manner as shown in the preceding example, except, of course, that you should use the actual calibration resistance values instead of the nominal values when performing your calculations.

For example, assume that you are testing the 10kΩ range using an actual 10.03kΩ calibration resistance value. Using Model 2750 one-year 10kΩ range accuracy of ± (100ppm of reading + 6ppm of range), the calculated reading limits are:

Reading limits = 10.03kΩ ± [(10.03kΩ × 100ppm) + (10kΩ × 6ppm)]
Reading limits = 10.02894kΩ to 10.03106kΩ

Restoring factory defaults

Before performing the verification procedures, restore the instrument to its factory defaults as follows:

1. Press SHIFT and then SETUP. The instrument will display the following prompt: RESTORE: FACT.
2. Using either range key, select FACT, then restore the factory default conditions by pressing ENTER.

Performing the verification test procedures

Verification test summary

Verification tests can be performed either through the Model 2750 front panel terminals or through plug-in modules. This section contains the following procedures:

- Model 2750 verification — Use this procedure to test Model 2750 accuracy through the front panel terminals.
- Model 7700 verification — Use this procedure to test accuracy through any of the available plug-in modules with the same functions as the Model 7700 20-Channel Multiplexer Card.

Model 2750 tests

Model 2750 verification test procedures include:

- DC volts
- AC volts
- DC current
- AC current
- Resistance
- Temperature
- Frequency

Model 7700 tests

Model 7700 verification test procedures include:

- DC volts
- AC volts
- DC current
- AC current
- Resistance
- Temperature
- Frequency
- Ratio and average

Test considerations

When performing the verification procedures:

- Be sure to restore factory defaults as outlined above.
- Make sure the equipment is properly warmed up and connected to the correct input terminals. Also make sure that the INPUTS switch is in the correct position.
- Do not use autoranging for any verification tests because autorange hysteresis may cause the Model 2750 to be on an incorrect range. For each test signal, you must manually set the correct range for the Model 2750 using the range keys.
- Make sure the calibrator is in operate before you verify each measurement.
- Always let the source signal settle before taking a reading.

WARNING Observe the following safety precautions when performing these tests:

- Some of the procedures in this section may expose you to dangerous voltages. Use standard safety precautions when such dangerous voltages are encountered to avoid personal injury or death caused by electric shock.
- For the front panel terminals only, the maximum common-mode voltage (voltage between INPUT LO and chassis ground) is 500V peak. Exceeding this value may cause a breakdown in insulation, creating a shock hazard.
- For the plug-in modules, the maximum common-mode voltage (voltage between any plug-in module terminal and chassis ground) is listed in the module's specifications. Exceeding this value may cause a breakdown in insulation, creating a shock hazard.
- When using the front panel terminals simultaneously with plug-in modules, all cable insulation voltage ratings must equal or exceed the maximum voltage applied to either the front panel terminals or the plug-in module terminals.

Model 2750 verification

Perform these tests to verify accuracy using the Model 2750 front panel terminals.

Verifying DC voltage

Check DC voltage accuracy by applying accurate voltages from the DC voltage calibrator to the Model 2750 INPUT jacks and verify that the displayed readings fall within specified limits.

CAUTION Do not exceed 1000V peak between front terminals INPUT HI and INPUT LO because instrument damage may occur.

Follow these steps to verify DC voltage accuracy:

1. Connect the Model 2750 HI and LO INPUT jacks to the DC voltage calibrator as shown in Figure 1-1. Make sure the INPUTS switch is set to the FRONT position.

NOTE *Use shielded, low-thermal connections when testing the 100mV and 1V ranges to avoid errors caused by noise or thermal effects. Connect the shield to the calibrator's output LO terminal.*

Figure 1-1
Connections for Model 2750 DC volts verification

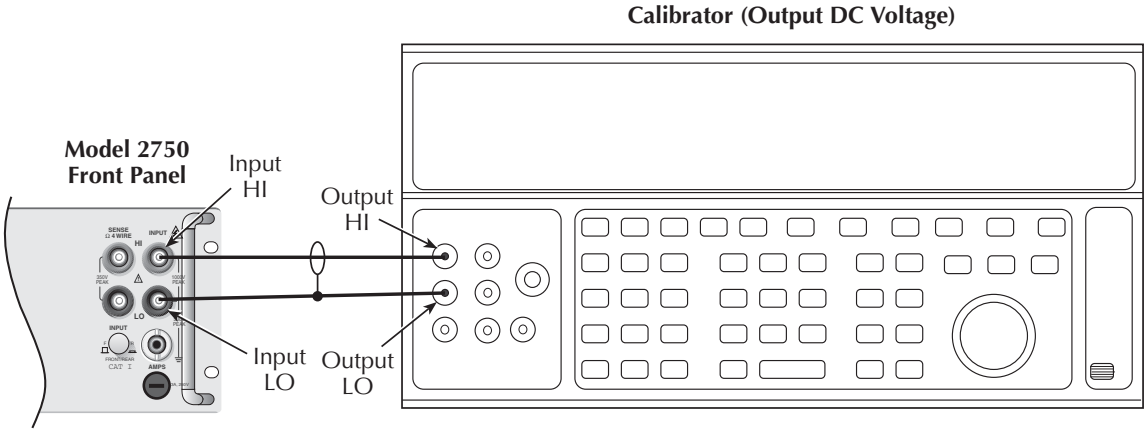

Note: Use shielded, low-thermal cables
for 100mV and 1V ranges.

2. Select the DC volts function by pressing the DCV key, and set the Model 2750 to the 100mV range.
3. Set the calibrator output to 0.00000mV DC, and allow the reading to settle.
4. Enable the Model 2750 REL mode. Leave REL enabled for the remainder of the DC volts verification test.
5. Source positive and negative and full-scale voltages for each of the ranges listed in Table 1-2. For each voltage setting, be sure that the reading is within stated limits.

Table 1-2
DCV reading limits

Range	Applied DC Voltage*	Reading Limits (1 year, 18°C to 28°C)
100mV	100.0000mV	99.9935 to 100.0065mV
1V	1.000000V	0.999963 to 1.000037V
10V	10.00000V	9.99965 to 10.00035V
100V	100.0000V	99.9946 to 100.0054V
1000V**	1000.000V	999.931 to 1000.069V

*Source positive and negative values for each range.
**Refer to specifications DC note 5 for signal >500V.

Verifying AC voltage

Check AC voltage accuracy by applying accurate AC voltages at specific frequencies from the AC voltage calibrator to the Model 2750 inputs and verifying that the displayed readings fall within specified ranges.

CAUTION Do not exceed 1000V peak between front terminals INPUT HI and INPUT LO, or 8×10^7VHz input, because instrument damage may occur.

Follow these steps to verify AC voltage accuracy:

1. Connect the Model 2750 HI and LO INPUT jacks to the AC voltage calibrator as shown in Figure 1-2. Be sure the INPUTS switch is in the FRONT position.

Figure 1-2
Connections for Model 2750 AC volts verification

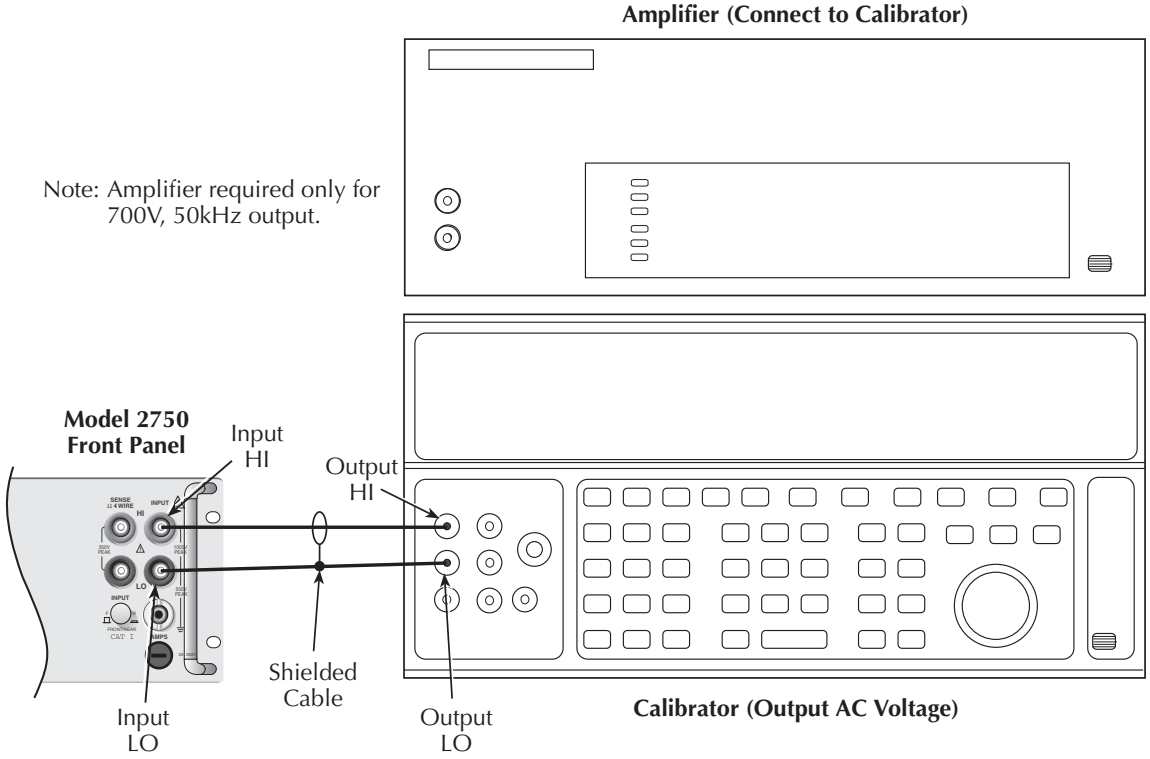

2. Select the AC volts function by pressing the ACV key.
3. Set the Model 2750 for the 100mV range; make sure that REL is disabled.

4. Source 1kHz and 50kHz AC voltages for each of the ranges summarized in Table 1-3, and make sure the respective Model 2750 readings fall within stated limits.

Table 1-3
ACV reading limits

ACV Range	Applied AC Voltage	1kHz Reading Limits (1 year, 18°C to 28°C)	50kHz Reading Limits (1 year, 18°C to 28°C)
100mV	100.0000mV	99.910 to 100.090mV	99.830 to 100.170mV
1V	1.000000V	0.99910 to 1.00090V	0.99830 to 1.00170V
10V	10.00000V	9.9910 to 10.0090V	9.98300 to 10.0170V
100V	100.0000V	99.910 to 100.090V	99.830 to 100.170V
750V	700.000V*	699.36 to 700.64V	698.79 to 701.21V

* If the 5725A amplifier is not available, change the 700V @ 50kHz step to 220V @ 50kHz. Reading limits for 220V @ 50kHz = 219.36 to 220.64V.

Verifying DC current

Check DC current accuracy by applying accurate DC currents from the DC current calibrator to the AMPS input of the Model 2750 and verify that the displayed readings fall within specified limits.

Follow these steps to verify DC current accuracy:

1. Connect the Model 2750 AMPS and INPUT LO jacks to the calibrator as shown in Figure 1-3. Be sure the INPUTS switch is in the FRONT position.
2. Select the DC current measurement function by pressing the DCI key.

Figure 1-3
Connections for Model 2750 DC current verification

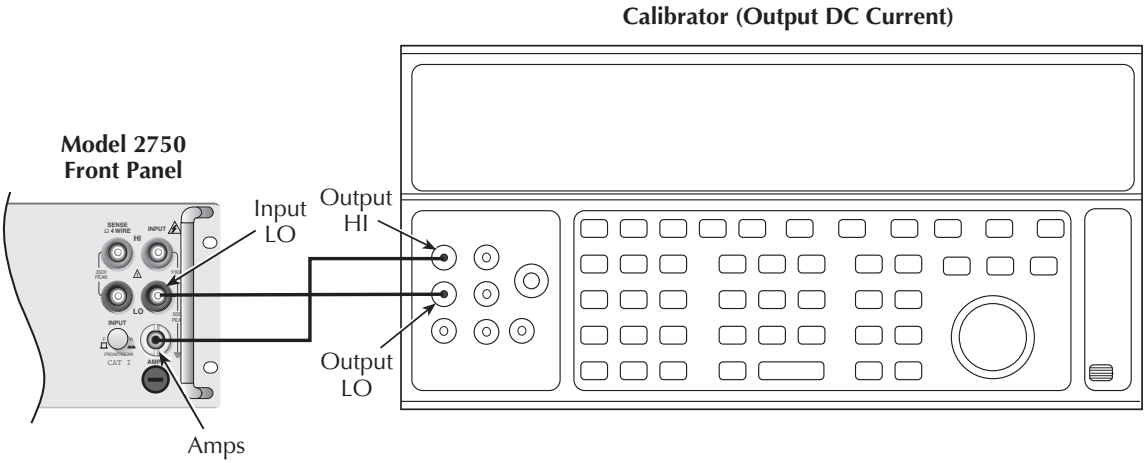

Note: Be sure calibrator is set for normal current output.

3. Set the Model 2750 for the 20mA range.
4. Source positive and negative full-scale currents for each of the ranges listed in Table 1-4, and verify that the readings for each range are within stated limits.

Table 1-4
DCI limits

DCI Range	Applied DC Current*	Reading Limits (1 year, 18°C to 28°C)
20mA	20.0000mA	19.89960 to 20.01040mA
100mA	100.0000mA	99.9100 to 100.0900mA
1A	1.000000A	0.999160 to 1.000840A
3A	3.000000A**	2.99628 to 3.00372A

* Source positive and negative currents with values shown.
** If the Fluke 5725 amplifier is not available, apply 2.2A from calibrator. Reading limits for 2.2A input are: 2.197240 to 2.202760A.

Verifying AC current

Check AC current accuracy by applying accurate AC voltage current at specific frequencies from the AC current calibrator to the Model 2750 input, and verify that the displayed readings fall within specified limits. Follow these steps to verify AC current:

1. Connect the Model 2750 AMPS and INPUT LO jacks to the calibrator as shown in Figure 1-4. Be sure the INPUTS switch is in the FRONT position.
2. Select the AC current function by pressing the ACI key.

Figure 1-4
Connections for Model 2750 AC current verification

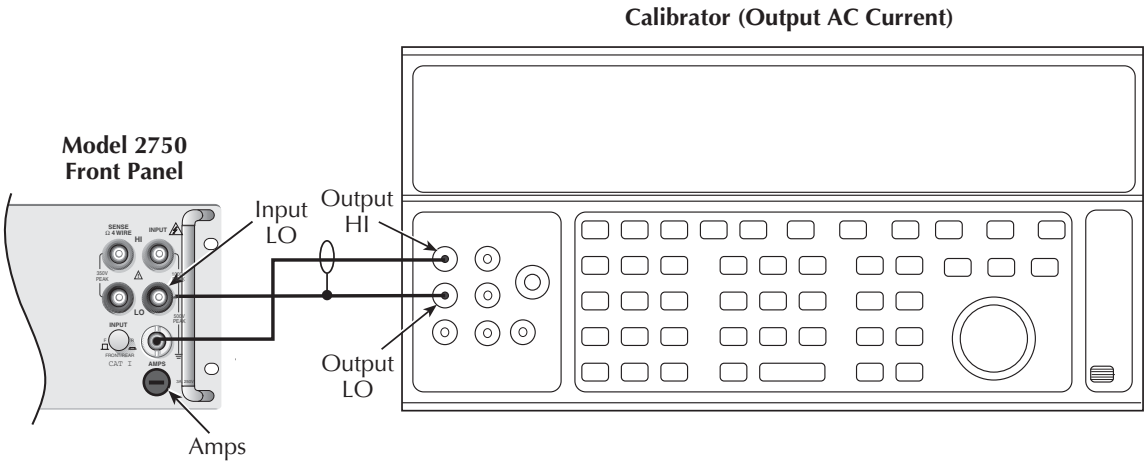

3. Set the Model 2750 for the 1A range.
4. Source 1A and 3A, 1kHz full-scale AC currents as summarized in Table 1-5, and verify that the readings are within stated limits.

Table 1-5
ACI limits

ACV Range	Applied AC Voltage	Reading Limits @ 1kHz (1 year, 18°C to 28°C)
1A	1.000000A	0.99860 to 1.00140A
3A	3.00000A*	2.9817 to 3.0183A

* If the Fluke 5725A amplifier is not available, apply 2.2A from the calibrator. Reading limits for 2.2A are 2.1949 to 2.2051A.

Verifying normal resistance

Check the normal resistance function by connecting accurate resistance values to the Model 2750 and verifying that its resistance readings are within the specified limits.

CAUTION Do not apply more than 1000V peak between front terminals INPUT HI and LO or more than 350V peak between SENSE HI and LO, or instrument damage could occur.

Follow these steps to verify resistance accuracy:

1. Using shielded, Teflon-insulated or equivalent cables in a 4-wire configuration, connect the Model 2750 INPUT and SENSE jacks to the calibrator as shown in Figure 1-5. Be sure the INPUTS switch is in the FRONT position.
2. Set the calibrator for 4-wire resistance with external sense on.

Figure 1-5
Connections for Model 2750 resistance verification (1Ω to 10MΩ ranges)

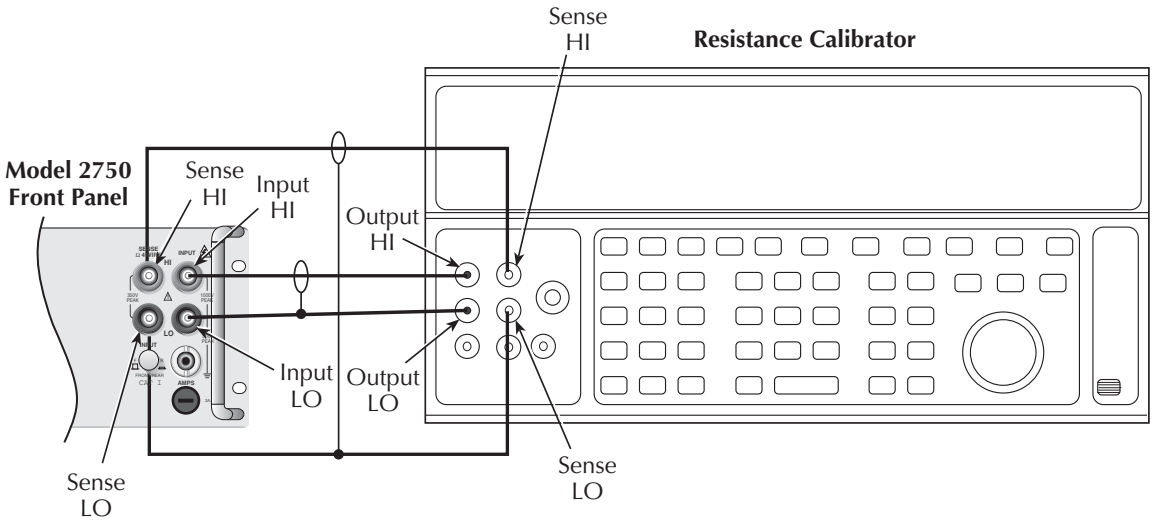

Note: Use shielded, low-thermal cables to minimize noise. Enable or disable calibrator external sense as indicated in procedure.

3. Select the Model 2750 4-wire resistance function by pressing the Ω4 key, then choose the SLOW integration rate with the RATE key.
4. Set the Model 2750 for the 1Ω range, and make sure the FILTER is on. Enable OCOMP (offset-compensated ohms) by pressing SHIFT then OCOMP. (Use OCOMP for 1Ω, 10Ω, and 100Ω range verification.)
5. Recalculate reading limits based on actual calibrator resistance values.
6. Source the nominal full-scale resistance values for the 1Ω-10MΩ ranges summarized in Table 1-6, and verify that the readings are within calculated limits.
7. Connect the Model 2750 INPUT and SENSE jacks to the calibrator as shown in Figure 1-6.
8. Disable external sense on the calibrator.
9. Set the Model 2750 for the 100MΩ range.
10. Source a nominal 100MΩ resistance value and verify that the reading is within calculated limits for the 100MΩ range.

Figure 1-6
Connections for Model 2750 resistance verification (100MΩ range)

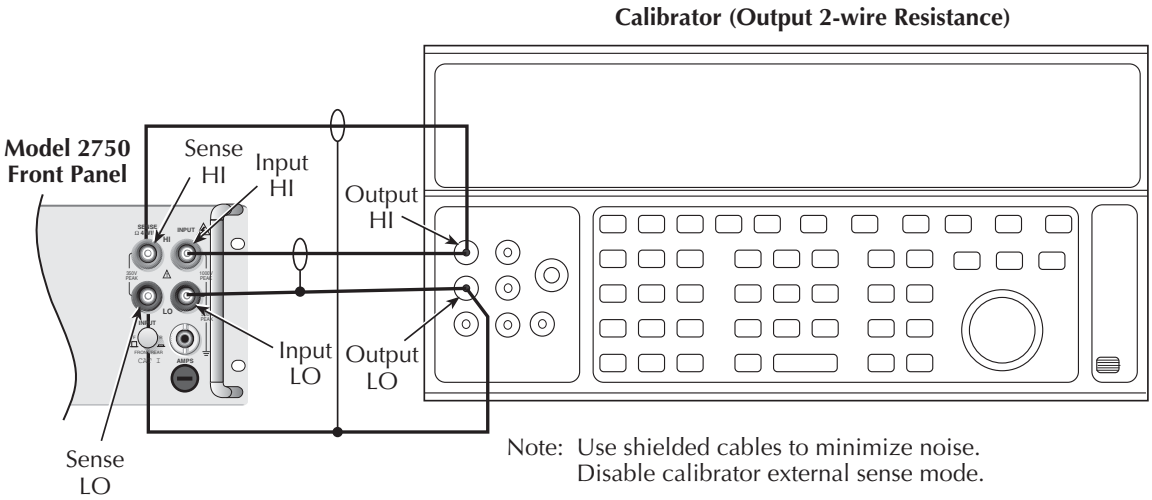

Table 1-6
Limits for normal resistance verification

Ω Range	Nominal Resistance	Nominal Reading Limits (1 year, 18°C to 28°C)	Recalculated Limits**
1Ω*	1Ω	0.999820 to 1.000180Ω	_____ to _____ Ω
10Ω*	10Ω	9.99880 to 10.00120Ω	_____ to _____ Ω
100Ω*	100Ω	99.9880 to 100.0120Ω	_____ to _____ Ω
1kΩ	1kΩ	0.999894 to 1.000106kΩ	_____ to _____ kΩ
10kΩ	10kΩ	9.99894 to 10.00106kΩ	_____ to _____ kΩ
100kΩ	100kΩ	99.9890 to 100.0110kΩ	_____ to _____ kΩ
1MΩ	1MΩ	0.999890 to 1.000110MΩ	_____ to _____ MΩ
10MΩ	10MΩ	9.99590 to 10.00410MΩ	_____ to _____ MΩ
100MΩ	100MΩ	99.7970 to 100.2030MΩ	_____ to _____ MΩ

* Enable OCOMP (offset-compensated ohms) when testing 1Ω, 10Ω, and 100Ω ranges.
** Calculate limits based on actual calibration resistance values and Model 2750 one-year resistance accuracy specifications. See "Verification limits."

Verifying dry circuit resistance

Check the dry circuit resistance function by connecting accurate resistance values to the Model 2750 and verifying that its resistance readings are within the specified limits.

CAUTION Do not apply more than 1000V peak between front terminals INPUT HI and LO or more than 350V peak between SENSE HI and LO, or instrument damage could occur.

Follow these steps to verify dry circuit resistance accuracy:

1. Using shielded, Teflon-insulated or equivalent cables in a 4-wire configuration, connect the Model 2750 INPUT and SENSE jacks to the calibrator as shown in Figure 1-7. Be sure the INPUTS switch is in the FRONT position.

Figure 1-7
Connections for Model 2750 dry circuit resistance verification

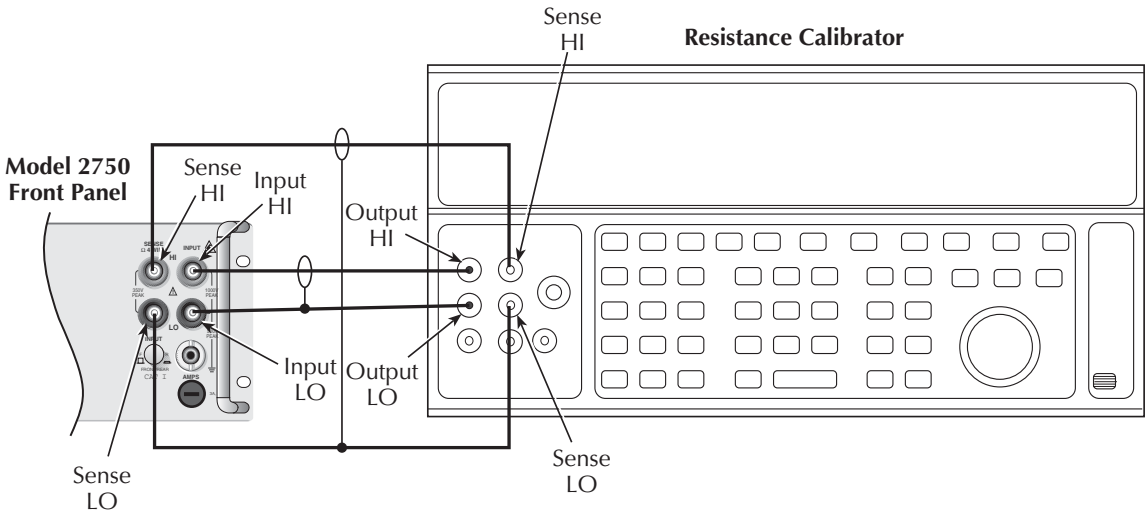

Note: Use low-thermal cables to minimize noise.

2. Set the calibrator for 4-wire resistance with external sense on.
3. Select the Model 2750 4-wire resistance function by pressing the Ω4 key, then choose the SLOW integration rate with the RATE key.
4. Select the Model 2750 dry circuit resistance function by pressing SHIFT then DRYCKT.
5. Set the Model 2750 for the 1Ω range, and make sure the FILTER is on. Enable OCOMP (offset-compensated ohms) by pressing SHIFT then OCOMP. (Use OCOMP for 1Ω, 10Ω, 100Ω, and 1kΩ range verification.) Enable line sync ON by pressing SHIFT then LSYNC.

NOTE Maximum reading rate for the 1k¾ range is two readings per second.

6. Recalculate reading limits based on actual calibrator resistance values.
7. Source the nominal full-scale resistance values for the 1Ω-1kΩ ranges summarized in Table 1-7, and verify that the readings are within calculated limits.

Table 1-7
Limits for Model 2750 dry resistance verification

Ω Range	Nominal Resistance	Nominal Reading Limits (1 year, 18°C to 28°C)	Recalculated Limits**
1Ω*	1Ω	0.999860 to 1.000140Ω	_____ to _____ Ω
10Ω*	10Ω	9.99860 to 10.00140Ω	_____ to _____ Ω
100Ω*	100Ω	99.9820 to 100.0180Ω	_____ to _____ Ω
1kΩ	1kΩ	0.999510 to 1.000490kΩ	_____ to _____ kΩ

* Enable OCOMP (offset-compensated ohms) when testing 1Ω, 10Ω, 100Ω, and 1kΩ ranges.
** Calculate limits based on actual calibration resistance values and Model 2750 one-year dry circuit resistance accuracy specifications. See "Verification limits."

Verifying temperature

Thermocouple, thermistor, and RTD temperature readings are derived from DC volts and resistance measurements respectively. For that reason, it is not necessary to independently verify the accuracy of temperature measurements. As long as the DC volts and resistance functions meet or exceed specifications, temperature function accuracy is automatically verified. However, temperature verification procedures are provided below for those who wish to separately verify temperature accuracy.

Thermocouple temperature

1. Connect the DC voltage calibrator output terminals to the Model 2750 INPUT jacks using low-thermal shielded connections. (Use 2-wire connections similar to those shown in Figure 1-1.) Be sure the INPUTS switch is in the FRONT position.
2. Configure the Model 2750 for °C units, type J temperature sensor, and 0°C simulated reference junction as follows:
   a. Press SHIFT then SENSOR, and note the unit displays the temperature units: UNITS: C. (If necessary, use the cursor and range keys to select °C units.)
   b. Press ENTER. The unit displays the sensor type: SENS: TCOUPLE.
   c. Make sure that TCOUPLE is displayed, then press ENTER. The unit then displays the thermocouple type: TYPE: K.
   d. Select a type J temperature sensor, then press ENTER. The unit then displays the reference junction type: JUNC: SIM.
   e. Make certain that the simulated reference junction type is selected, then press ENTER. The unit then displays the current simulated reference junction temperature: SIM: 023.
   f. Using the cursor and range keys, set the reference junction temperature to 0°C, then press ENTER twice to complete the temperature configuration process.
3. Select the temperature function by pressing the TEMP key.
4. Source each of the voltages summarized in Table 1-8, and verify that the temperature readings are within limits. Be sure to select the appropriate thermocouple type for each group of readings. (See step 2 above.)

Table 1-8
Thermocouple temperature verification reading limits

Thermocouple Type	Applied DC Voltage*	Reading Limits (1 year, 18°C to 28°C)
J	-7.659mV	-190.2 to -189.9°C
	0mV	-0.2 to +0.2°C
	42.280mV	749.8 to 750.2°C
K	-5.730mV	-190.2 to -189.8°C
	0mV	-0.2 to +0.2°C
	54.138mV	1349.8 to 1350.2°C

* Voltages shown are based on ITS-90 standard using 0°C reference junction temperature. See text for procedure to set reference junction temperature.

RTD temperature

1. Connect the precision decade resistance box (listed in Table 1-1) to the Model 2750 INPUT and SENSE jacks using four-wire connections. (See Figure 1-5 for similar connecting scheme.) Be sure the INPUTS switch is in the FRONT position.
2. Configure the Model 2750 temperature function for °C units and RTD temperature sensor (α=0.00385) as follows:
   a. Press SHIFT then SENSOR, and note the unit displays the temperature units: UNITS: C.
   b. Press ENTER, and note the unit displays the sensor type: SENS: TCOUPLE.
   c. Using the cursor and range keys, set the display as follows: SENS: 4W-RTD.
   d. Press ENTER, and note the unit displays: TYPE: PT100.
   e. Using the cursor and range keys, set the unit for the following display: TYPE: PT385.
   f. Press ENTER to complete the temperature configuration process.
3. Select the temperature function by pressing the TEMP key.
4. Set the decade resistance box to each of the values shown in Table 1-9, and verify that the temperature readings are within the required limits.

Table 1-9
Four-wire RTD temperature verification reading limits

Applied Resistance*	Reading Limits (1 year, 18°C to 28°C)
22.80Ω	-190.06 to -189.94°C
100.00Ω	-0.06 to +0.06°C
313.59Ω	599.94 to 600.06°C

*Based on α = 0.00385. See text.

Verifying frequency

Follow the steps below to verify the Model 2750 frequency function:

1. Connect the function generator to the Model 2750 INPUT jacks. (See Figure 1-8.) Be sure the INPUTS switch is in the FRONT position.
2. Set the function generator to output a 1kHz, 1V RMS sine wave.
3. Select the Model 2750 frequency function by pressing the FREQ key.
4. Verify that the Model 2750 frequency reading is between 999.9Hz and 1.0001kHz.

Figure 1-8
Connections for Model 2750 frequency verification

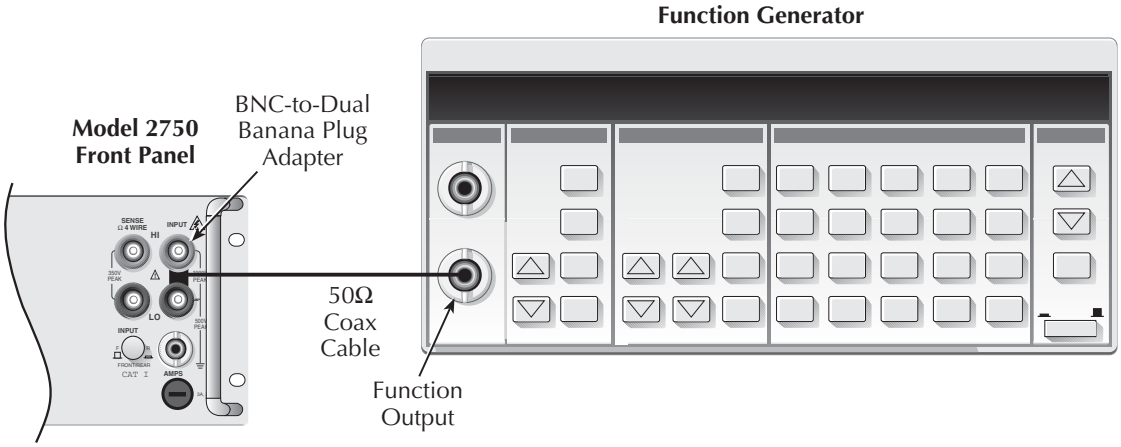

Model 7700 verification

Use these procedures to verify measurement accuracy through the Model 7700 20-Channel Multiplexer Card.

NOTE *Although the following tests are based on the Model 7700 20-Channel Multiplexer, the same general procedures can be used for other plug-in modules that have similar capabilities. Refer to module documentation for specific information on terminals and connections for other plug-in modules.*

Verifying DC voltage

Check DC voltage accuracy by applying accurate voltages from the DC voltage calibrator to the Model 7700 input terminals and verifying that the displayed readings fall within specified limits.

CAUTION Do not exceed 300V DC between the 7700 plug-in module INPUT H and L terminals or between any adjacent channels.

Follow these steps to verify DC voltage accuracy:

1. Connect the Model 7700 CH1 H and L INPUT terminals to the DC voltage calibrator as shown in Figure 1-9.

NOTE *Use shielded, low-thermal connections when testing the 100mV and 1V ranges to avoid errors caused by noise or thermal effects. Connect the shield to the calibrator's output LO terminal.*

Figure 1-9
Connections for Model 7700 DC volts verification

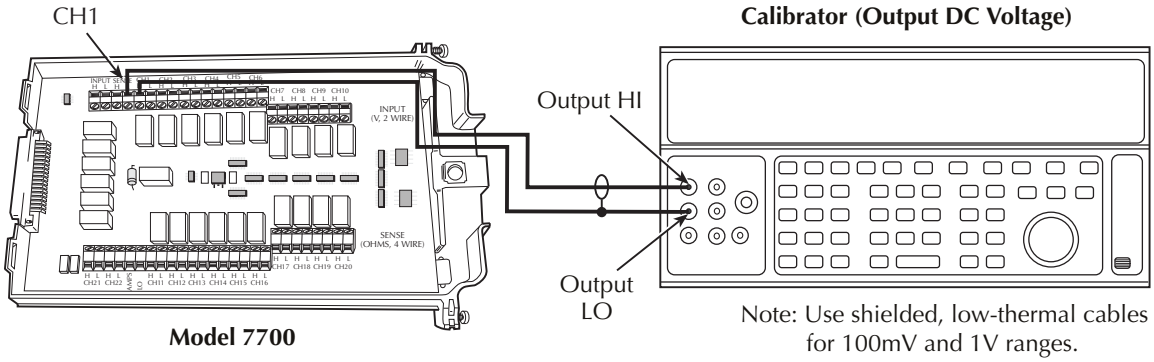

2. Install the Model 7700 in Slot 1 of the Model 2750, then turn on the power and allow the unit to warm up for two hours before proceeding. Be sure the front panel INPUTS switch is set to the REAR position.
3. Select the DC volts function by pressing the DCV key, and set the Model 2750 to the 100mV range. Close Channel 1 by pressing the CLOSE key, then ENTER for "SINGLE" channel, and then keying in 101.
4. Set the calibrator output to 0.00000mV DC, and allow the reading to settle.
5. Enable the Model 2750 REL mode. Leave REL enabled for the remainder of the DC volts verification test.
6. Source positive and negative and full-scale voltages for each of the ranges listed in Table 1-10. For each voltage setting, be sure that the reading is within stated limits.
7. Press the OPEN key to open Channel 1.

Table 1-10
Plug-in module DCV reading limits

Range	Applied DC Voltage*	Reading Limits (1 year, 18° to 28°C)
100mV	100.0000mV	99.9935 to 100.0065mV
1V	1.000000V	0.999963 to 1.000037V
10V	10.00000V	9.99965 to 10.00035V
100V	100.0000V	99.9946 to 100.0054V
1000V	300.000V	299.976 to 300.024V

*Source positive and negative values for each range.

Verifying AC voltage

Check AC voltage accuracy by applying accurate AC voltages at specific frequencies from the AC voltage calibrator to the Model 7700 inputs and verifying that the displayed readings fall within specified ranges.

CAUTION Do not exceed 300V RMS between the 7700 plug-in module INPUT H and L terminals or between adjacent channels, or 8×10^7VHz input, because instrument damage may occur.

Follow these steps to verify AC voltage accuracy:

1. Connect the Model 7700 CH1 H and L INPUT terminals to the AC voltage calibrator as shown in Figure 1-10.

Figure 1-10
Connections for Model 7700 AC volts verification

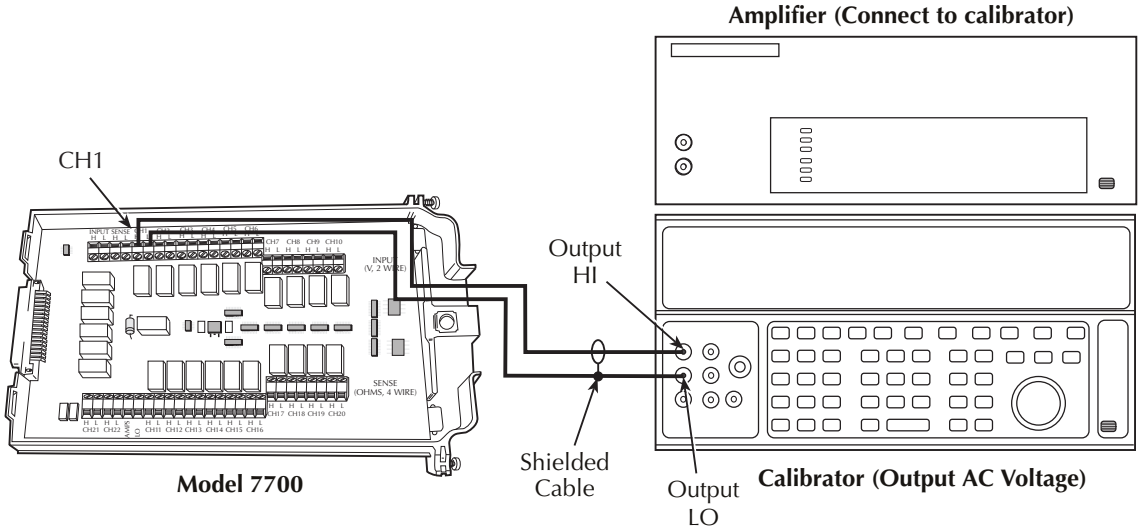

2. Install the Model 7700 in Slot 1 of the Model 2750, then turn on the power, and allow the unit to warm up for two hours before proceeding. Be sure the front panel INPUTS switch is set to the REAR position.
3. Select the AC volts function by pressing the ACV key. Close Channel 1 by pressing the CLOSE key, then ENTER for “SINGLE” channel, and then keying in 101.
4. Set the Model 2750 for the 100mV range; make sure that REL is disabled.
5. Source 1kHz and 50kHz AC voltages for each of the ranges summarized in Table 1-11, and make sure that the respective Model 2750 readings fall within stated limits.
6. Press the OPEN key to open Channel 1.

Table 1-11
Plug-in module ACV reading limits

ACV Range	Applied AC Voltage	1kHz Reading Limits (1 year, 18°C to 28°C)	50kHz Reading Limits (1 year, 18°C to 28°C)
100mV	100.0000mV	99.910 to 100.090mV	99.830 to 100.170mV
1V	1.000000V	0.99910 to 1.00090V	0.99830 to 1.00170V
10V	10.00000V	9.9910 to 10.0090V	9.98300 to 10.0170V
100V	100.0000V	99.910 to 100.090V	99.830 to 100.170V
750V	300.000V*	299.60 to 300.40V	299.27 to 300.73V

*If the 5725A amplifier is not available, change the 300V @ 50kHz step to 220V @ 50kHz. Reading limits for 220V @ 50kHz = 219.36 to 220.64V.

Verifying DC current

Check DC current accuracy by applying accurate DC currents from the DC current calibrator to the input terminals of the Model 7700 and verify that the displayed readings fall within specified limits.

Follow these steps to verify DC current accuracy:

1. Connect the Model 7700 CH21 H and L terminals to the calibrator as shown in Figure 1-11.
2. Install the Model 7700 in Slot 1 of the Model 2750, then turn on the power, and allow the unit to warm up for two hours before proceeding. Be sure the front panel INPUTS switch is set to the REAR position.
3. Select the DC current measurement function by pressing the DCI key.
4. Set the Model 2750 for the 20mA range. Close Channel 21 by pressing the CLOSE key, then ENTER for “SINGLE” channel, and keying in 121.
5. Source positive and negative full-scale currents for each of the ranges listed in Table 1-12, and verify that the readings for each range are within stated limits.
6. Press the OPEN key to open Channel 21.

Figure 1-11
Connections for Model 7700 DC current verification

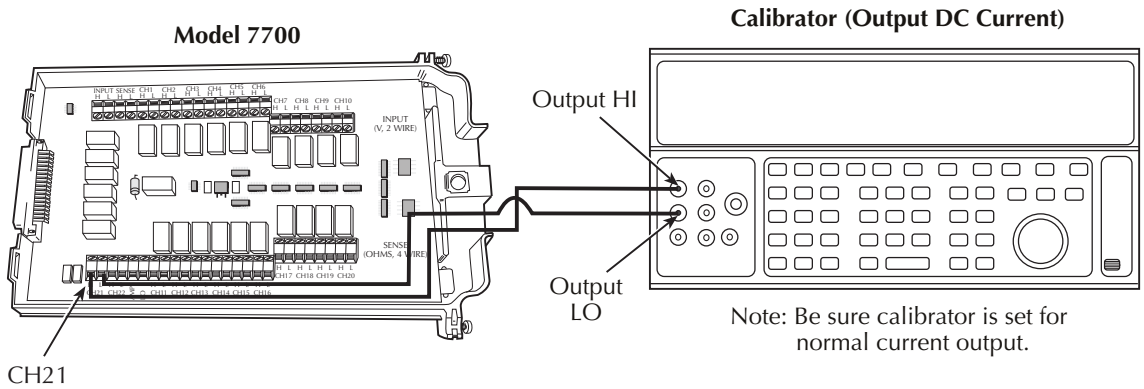

Table 1-12
Plug-in module DCI limits

DCI Range	Applied DC Current*	Reading Limits (1 year, 18°C to 28°C)
20mA	20.0000mA	19.89960 to 20.01040mA
100mA	100.0000mA	99.9100 to 100.0900mA
1A	1.000000A	0.999160 to 1.000840A
3A	3.000000A**	2.99628 to 3.00372A

* Source positive and negative currents with values shown.
** If the Fluke 5725 amplifier is not available, apply 2.2A from calibrator. Reading limits for 2.2A input are: 2.197240 to 2.202760A.

Verifying AC current

Check AC current accuracy by applying accurate AC voltage current at specific frequencies from the AC current calibrator to the Model 7700 input terminals and verify that the displayed readings fall within specified limits. Follow these steps to verify AC current:

1. Connect the Model 7700 CH21 H and L terminals to the calibrator as shown in Figure 1-12.
2. Install the Model 7700 in Slot 1 of the Model 2750, then turn on the power, and allow the unit to warm up for two hours before proceeding. Be sure the front panel INPUTS switch is set to the REAR position.
3. Select the AC current function by pressing the ACI key.
4. Set the Model 2750 for the 1A range. Close Channel 21 by pressing the CLOSE key, then ENTER for “SINGLE” channel, and keying in 121.

Figure 1-12
Connections for Model 7700 AC current verification

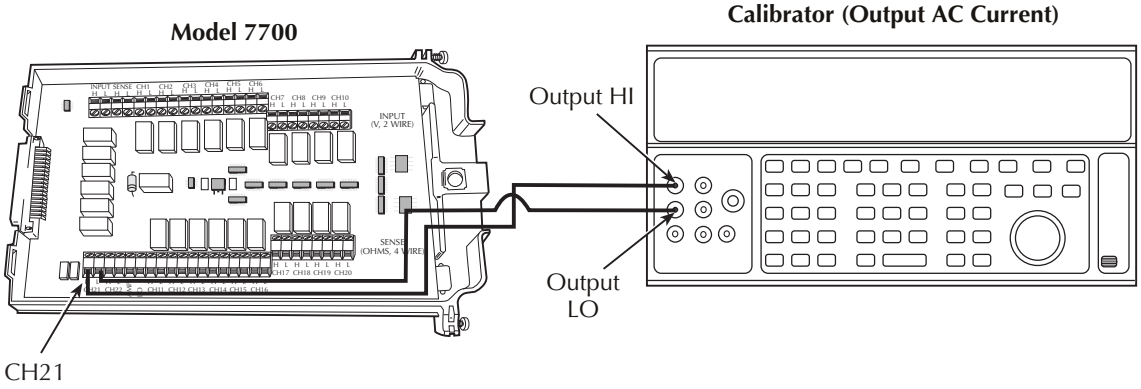

5. Source 1A and 3A, 1kHz full-scale AC currents as summarized in Table 1-13, and verify that the readings are within stated limits.
6. Press the OPEN key to open Channel 21.

Table 1-13
Plug-in module ACI limits

ACV Range	Applied AC Voltage	Reading Limits @ 1kHz (1 year, 18°C to 28°C)
1A	1.000000A	0.99860 to 1.00140A
3A	3.00000A*	2.9817 to 3.0183A

*If the Fluke 5725A amplifier is not available, apply 2.2A from the calibrator. Reading limits for 2.2A are 2.1949 to 2.2051A.

Verifying normal resistance

Check normal resistance by connecting accurate resistance values to the Model 7700 and verify that its resistance readings are within the specified limits.

CAUTION Do not apply more than 300V between the 7700 plug-in module INPUT or SENSE H and L terminal, or between any adjacent channels, or instrument damage could occur.

Follow these steps to verify normal resistance accuracy:

1. Using shielded Teflon or equivalent cables in a 4-wire configuration, connect the Model 7700 CH1 H and L INPUT terminals, and CH11 H and L SENSE terminals to the calibrator as shown in Figure 1-13.
2. Install the Model 7700 in Slot 1 of the Model 2750, then turn on the power, and allow the unit to warm up for two hours before proceeding. Be sure the front panel INPUTS switch is set to the REAR position.
3. Set the calibrator for 4-wire resistance with external sense on.
4. Select the Model 2750 4-wire resistance function by pressing the Ω4 key. Close Channel 1 by pressing the CLOSE key, then ENTER for “SINGLE” channel, and keying in 101.
5. Set the Model 2750 for the 1Ω range, and make sure the FILTER is on. Enable OCOMP (offset-compensated ohms) by pressing SHIFT then OCOMP. (Use OCOMP for 1Ω, 10Ω, and 100Ω range verification.)
6. Recalculate reading limits based on actual calibrator resistance values.

Figure 1-13
Connections for Model 7700 resistance verification (1Ω to 10MΩ ranges)

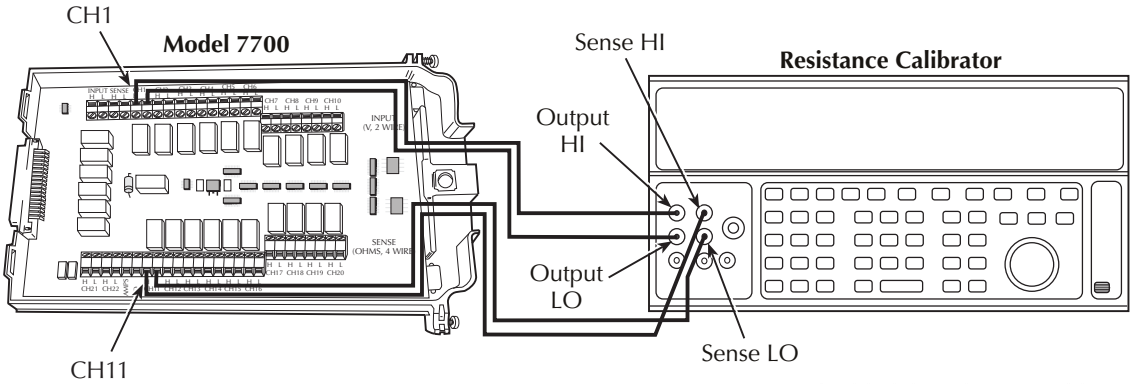

Note: Use shielded, low-thermal cables to minimize noise. Enable or disable calibrator external sense as indicated in procedure.

7. Source the nominal full-scale resistance values for the 1Ω-10MΩ ranges summarized in Table 1-14, and verify that the readings are within calculated limits.
8. Connect the Model 7700 CH1 and CH11 terminals to the calibrator as shown in Figure 1-14.
9. Disable external sense on the calibrator.
10. Set the Model 2750 for the 100MΩ range.
11. Source a nominal 100MΩ resistance value, and verify that the reading is within calculated limits for the 100MΩ range.
12. Press the OPEN key to open Channel 1.

Figure 1-14
Connections for Model 7700 resistance verification (100MΩ range)

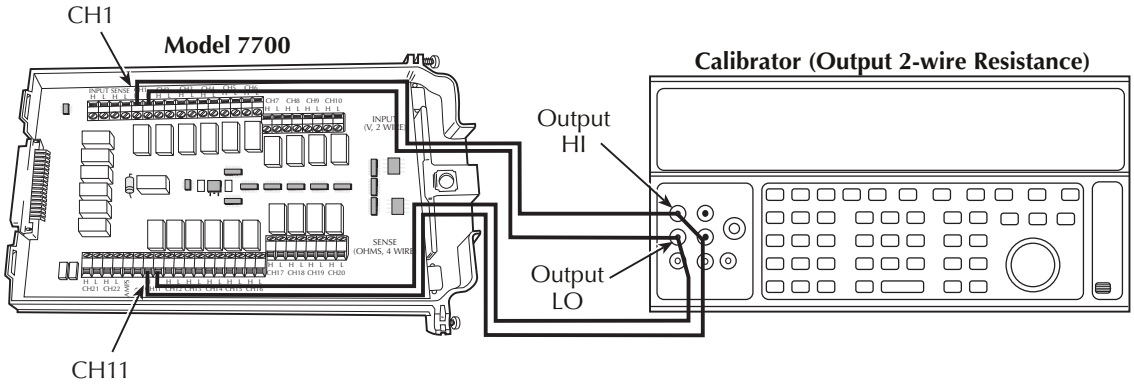

Note: Use shielded cables to minimize noise. Disable calibrator external sense mode.

Table 1-14
Limits for plug-in module normal resistance verification

Ω Range	Nominal resistance	Nominal reading limits (1 year, 18°C to 28°C)	Recalculated limits**
1Ω*	1Ω	0.999820 to 1.000180Ω	_____ to _____ Ω
10Ω*	10Ω	9.99880 to 10.00120Ω	_____ to _____ Ω
100Ω*	100Ω	99.9880 to 100.0120Ω	_____ to _____ Ω
1kΩ	1kΩ	0.999894 to 1.000106kΩ	_____ to _____ kΩ
10kΩ	10kΩ	9.99894 to 10.00106kΩ	_____ to _____ kΩ
100kΩ	100kΩ	99.9890 to 100.0110kΩ	_____ to _____ kΩ
1MΩ	1MΩ	0.999890 to 1.000110MΩ	_____ to _____ MΩ
10MΩ	10MΩ	9.99590 to 10.00410MΩ	_____ to _____ MΩ
100MΩ	100MΩ	99.5770 to 100.4230MΩ	_____ to _____ MΩ

* Enable OCOMP for 1Ω, 10Ω, and 100Ω ranges.
** Calculate limits based on actual calibration resistance values and Model 2750 one-year resistance accuracy specifications. See "Verification limits."

Verifying dry circuit resistance

Check the dry circuit resistance function by connecting accurate resistance values to the Model 2750 and verifying that its resistance readings are within the specified limits.

CAUTION Do not apply more than 300V between the 7700 plug-in module INPUT or SENSE H and L terminal, or between any adjacent channels, or instrument damage could occur.

Follow these steps to verify dry circuit resistance accuracy:

1. Using shielded Teflon or equivalent cables in a 4-wire configuration, connect the Model 7700 CH1 H and L INPUT terminals, and CH11 H and L SENSE terminals to the calibrator as shown in Figure 1-15.

NOTE The 1k¾ range can tolerate 80% of range (0.8¾) lead resistance. Ensure that relay and cable connections have ð0.8¾ of resistance before verifying the 1¾ range.

2. Install the Model 7700 in Slot 1 of the Model 2750, then turn on the power, and allow the unit to warm up for two hours before proceeding. Be sure the front panel INPUTS switch is set to the REAR position.
3. Set the calibrator for 4-wire resistance with external sense on.
4. Select the Model 2750 4-wire resistance function by pressing the Ω4 key. Close Channel 1 by pressing the CLOSE key, then ENTER for “SINGLE” channel, and keying in 101.
5. Set the Model 2750 for the dry circuit resistance function by pressing SHIFT then DRYCKT.

Figure 1-15
Connections for Model 7700 dry circuit resistance verification

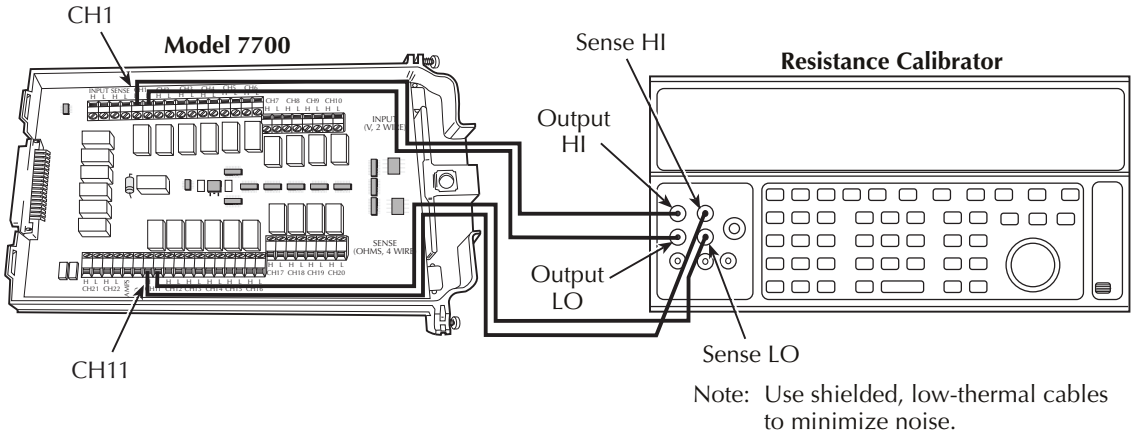

6. Set the Model 2750 for the 1Ω range, and make sure the FILTER is on. If previously disabled, enable OCOMP (offset-compensated ohms) by pressing SHIFT then OCOMP. (Use OCOMP for 1Ω, 10Ω, 100Ω, and 1kΩ range verification.) Enable line sync (press SHIFT then LSYNC).
7. Recalculate reading limits based on actual calibrator resistance values.

NOTE Maximum reading rate for 1k¾ dry circuit is two readings per second.

8. Source the nominal full-scale resistance values for the 1Ω-1kΩ ranges summarized in Table 1-15, and verify that the readings are within calculated limits.

Table 1-15
Limits for plug-in module dry circuit resistance verification

Ω Range	Nominal Resistance	Nominal Reading Limits (1 year, 18°C to 28°C)	Recalculated Limits**
1Ω*	1Ω	0.999860 to 1.000140Ω	_____ to _____ Ω
10Ω*	10Ω	9.99860 to 10.00140Ω	_____ to _____ Ω
100Ω*	100Ω	99.9820 to 100.0180Ω	_____ to _____ Ω
1kΩ	1kΩ	0.999510 to 1.000490kΩ	_____ to _____ kΩ

* Enable OCOMP (offset-compensated ohms) when testing 1Ω, 10Ω, 100Ω, and 1kΩ ranges.
** Calculate limits based on actual calibration resistance values and Model 2750 one-year resistance accuracy specifications. See "Verification limits."

Verifying temperature

Thermocouple, thermistor, and RTD temperature readings are derived from DC volts and resistance measurements respectively. For that reason, it is not necessary to independently verify the accuracy of temperature measurements. As long as the DC volts and resistance functions meet or exceed specifications, temperature function accuracy is automatically verified. However, temperature verification procedures are provided below for those who wish to separately verify temperature accuracy.

Thermocouple temperature

1. Connect the DC voltage calibrator output terminals and ice point reference to the Model 7700 CH1 H and L INPUT terminals using low-thermal shielded connections, as shown in Figure 1-16.

Figure 1-16
Connections for Model 7700 thermocouple temperature verification

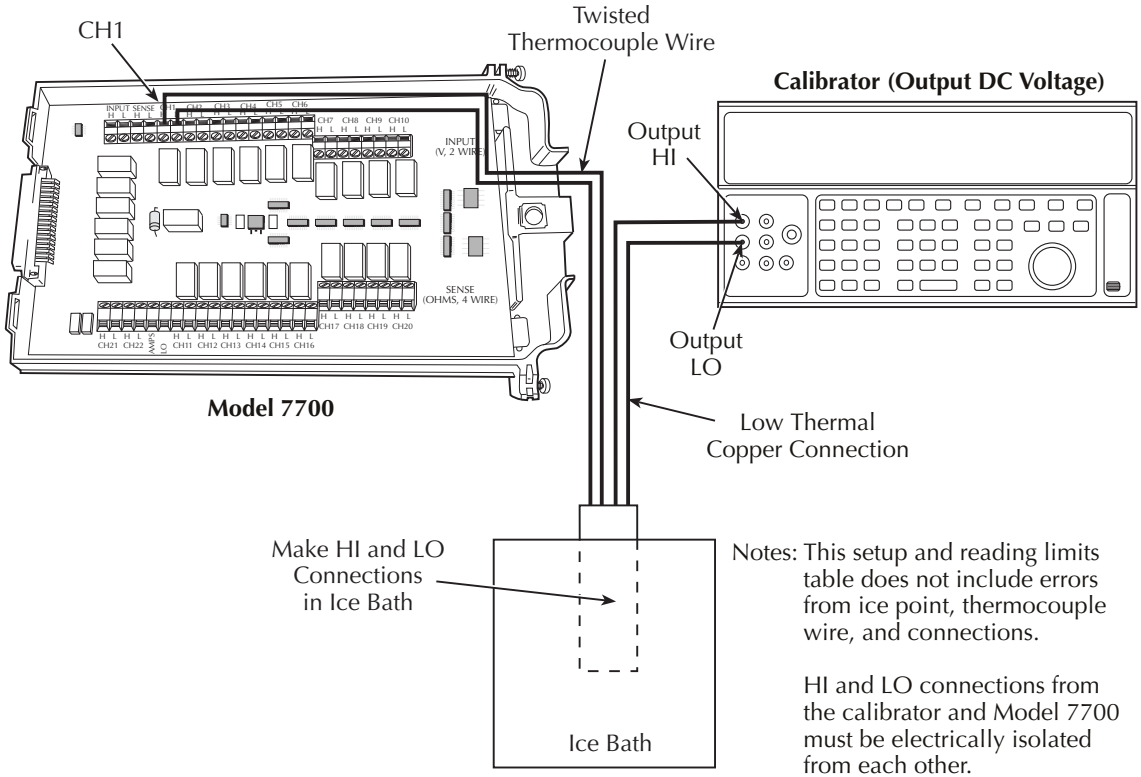

2. Install the Model 7700 in Slot 1 of the Model 2750, then turn on the power and allow the unit to warm up for two hours before proceeding. Be sure the front panel INPUTS switch is set to the REAR position.
3. Select the temperature function by pressing the TEMP key. Close Channel 1 by pressing the CLOSE key, then ENTER for “SINGLE” channel, and keying in 101.
4. Configure the Model 2750 for °C units, type K temperature sensor, and internal reference junction as follows:
   a. Press SHIFT then SENSOR, and note the unit displays the temperature units: UNITS: C. (If necessary, use the cursor and range keys to select °C units.)
   b. Press ENTER. The unit displays the sensor type: SENS: TCOUPLE.
   c. Make sure that TCOUPLE is displayed, then press ENTER. The unit displays the thermocouple type: TYPE: J.
   d. Select a type K temperature sensor, then press ENTER. The unit displays the reference junction type: JUNC: SIM.
   e. Select INT reference junction, then press ENTER.

NOTE Defaults for 7700, 7706, and 7708 modules are:

- *K type.*
- *“C” units.*
- *Internal temperature sensor.*
- *Open Tdetect off.*
- *Sensor type: Tcouple.*

5. Source each of the voltages summarized in Table 1-16 and verify that the temperature readings are within limits. Be sure to select the appropriate thermocouple type for each group of readings. (See step 3 above.) Open Channel 1 after the test is complete.

Table 1-16
Model 7700 thermocouple temperature verification reading limits

Thermocouple Type	Applied DC Voltage*	Reading Limits (1 year, 18°C to 28°C)
J	-7.659mV	-191.8 to -188.2°C
	0mV	-1.0 to +1.0°C
	42.280mV	749.0 to 751.0°C
K	-5.730mV	-191.8 to -188.2°C
	0mV	-1.0 to +1.0°C
	54.138mV	1349.0 to 1351.0°C

*Voltages shown are based on ITS-90 standard.

RTD temperature

1. Connect the precision decade resistance box (listed in Table 1-1) to the Model 7700 CH1 and CH11 H and L terminals using four-wire connections. (See Figure 1-14 for similar connecting scheme.)
2. Install the Model 7700 in Slot 1 of the Model 2750, then turn on the power and allow the unit to warm up for two hours before proceeding. Be sure the front panel INPUTS switch is set to the REAR position.
3. Select the temperature function by pressing the TEMP key. Close Channel 1 by pressing the CLOSE key and keying in 101.
4. Configure the Model 2750 temperature function for °C units and RTD temperature sensor (α=0.00385) as follows:
   a. Press SHIFT then SENSOR, and note the unit displays the temperature units: UNITS: C.
   b. Press ENTER, and note the unit displays the sensor type: SENS: TCOUPLE.
   c. Using the cursor and range keys, set the display as follows: SENS: 4W-RTD.
   d. Press ENTER, and note the unit displays: TYPE: PT100.
   e. Using the cursor and range keys, set the unit for the following display: TYPE: PT385.
   f. Press ENTER to complete the temperature configuration process.
5. Set the decade resistance box to each of the values shown in Table 1-17, and verify that the temperature readings are within the required limits. Open Channel 1 when finished.

Table 1-17
Plug-in module four-wire RTD temperature verification reading limits

Applied Resistance*	Reading Limits (1 year, 18°C to 28°C)
22.80Ω	-190.06 to -189.94°C
100.00Ω	-0.06 to +0.06°C
313.59Ω	599.94 to 600.06°C

*Based on α = 0.00385. See text.

Verifying frequency

Follow the steps below to verify the Model 2750 frequency function:

1. Connect the function generator to the Model 7700 CH1 H and L INPUT terminals (Figure 1-17).
2. Install the Model 7700 in Slot 1 of the Model 2750, then turn on the power and allow the unit to warm up for one hour before proceeding. Be sure the front panel INPUTS switch is set to the REAR position.
3. Set the function generator to output a 1kHz, 1V RMS sine wave.
4. Select the Model 2750 frequency function by pressing the FREQ key. Close Channel 1 by pressing the CLOSE key, then ENTER for “SINGLE” channel, and keying in 101.
5. Verify that the Model 2750 frequency reading is between 0.9999kHz and 1.0001kHz.

Figure 1-17
Connections for Model 7700 frequency verification

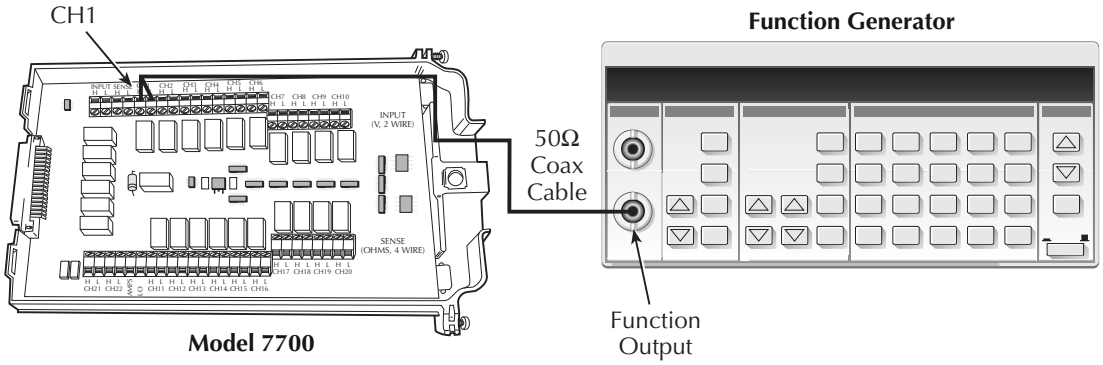

Verifying ratio and average

Follow the procedure below to verify ratio and average.

CAUTION Exceeding 300V between the 7700 plug-in module INPUT or SENSE H and L terminals may cause instrument damage.

1. Connect the Model 7700 CH1 and CH11 H and L terminals to the DC calibrator, as shown in Figure 1-18.
2. Install the Model 7700 in Slot 1 of the Model 2750, then turn on the power and allow the unit to warm up for two hours before proceeding. Be sure the front panel INPUTS switch is set to the REAR position.
3. Select the Model 2750 DCV function and the 1V range. Close Channel 1 by pressing the CLOSE key, then ENTER for “SINGLE” channel, and keying in 101.
4. Select the Model 2750 RATIO function (press SHIFT then RATIO).
5. Set the calibrator output to 1.00000V DC, and allow the reading to settle.
6. Verify that the ratio reading is between 0.9999926 and 1.000074.
7. Press OPEN to open Channel 1.

Figure 1-18
Connections for Model 7700 ratio and average verification

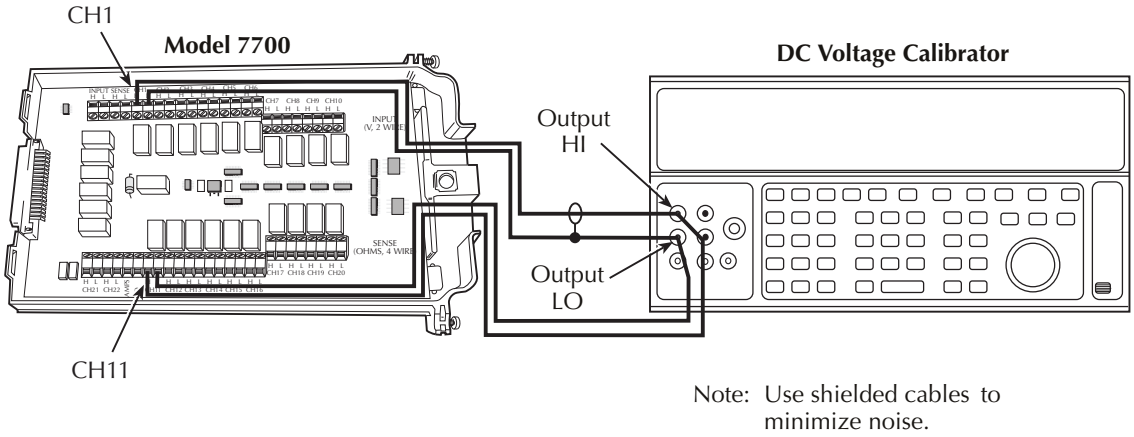

2
Calibration

Introduction

Use the procedures in this section to calibrate the Model 2750. Calibration procedures include:

- Comprehensive calibration: Usually the only calibration required in the field.
- Manufacturing calibration: Usually only performed at the factory (unless the unit has been repaired).
- Model 7700 calibration: Covers calibration procedures specific to Model 7700 cards.

WARNING The information in this section is intended only for qualified service personnel. Do not attempt these procedures unless you are qualified to do so.

All the procedures require accurate calibration equipment to supply precise DC and AC voltages, DC and AC currents, and resistance values. Comprehensive calibration can be performed any time by an operator either from the front panel, or by using the SCPI commands sent either over the IEEE-488 bus or the RS-232 port. DC-only and AC-only calibration may be performed individually, if desired.

Environmental conditions

Conduct the calibration procedures in a location that has:

- An ambient temperature of 18° to 28°C (65° to 82°F).
- A relative humidity of less than 80% unless otherwise noted.

Warmup period

Allow the Model 2750 Multimeter/Switch System to warm up for at least two hours before performing calibration.

If the instrument has been subjected to temperature extremes (those outside the ranges stated above) allow extra time for the instrument's internal temperature to stabilize. Typically, allow one extra hour to stabilize a unit that is 10°C (18°F) outside the specified temperature range.

Allow the test equipment to warm up for the minimum time specified by the manufacturer.

Line power

The Model 2750 requires a line voltage of 100V/120V/220V/240V, ±10% and a line frequency of 45Hz to 66Hz or 360Hz to 440Hz. Note that the line frequency is automatically sensed at power-up, but the line voltage must be manually set to either 100V/120V or 220V/240V as described in Section 3.

Calibration considerations

When performing the calibration procedures:

- Make sure that the equipment is properly warmed up and connected to the appropriate input jacks. Make sure that the correct front or rear terminals are selected with the INPUTS switch.
- Make sure the calibrator is in OPERATE before you complete each calibration step.
- Always let the source signal settle before calibrating each point.
- If an error occurs during calibration, the Model 2750 will generate an appropriate error message. See Appendix B for more information.

WARNING Observe the following safety precautions when performing these tests:

- Some of the procedures in this section may expose you to dangerous voltages. Use standard safety precautions when such dangerous voltages are encountered to avoid personal injury or death caused by electric shock.
- For the front panel terminals only, the maximum common-mode voltage (voltage between INPUT LO and chassis ground) is 500V peak. Exceeding this value may cause a breakdown in insulation, creating a shock hazard.
- For the plug-in modules, the maximum common-mode voltage (voltage between any plug-in module terminal and chassis ground) is listed in the module's specifications. Exceeding this value may cause a breakdown in insulation, creating a shock hazard.
- When using the front panel terminals simultaneously with plug-in modules, all cable insulation voltage ratings must equal or exceed the maximum voltage applied to either the front panel terminals or the plug-in module terminals.

Calibration code

Before performing comprehensive calibration, you must first unlock calibration by entering the appropriate calibration code.

Front panel calibration code

For front panel calibration, follow these steps:

1. Access the calibration menu by pressing SHIFT then TEST, then use the up or down range key to display TEST: CALIB. Press ENTER, and note that the instrument displays the following:

   CAL: DATES
2. Use the up or down range key to scroll through the available calibration items until the unit displays RUN, then press ENTER.
3. The Model 2750 then prompts you to enter a code:

   CODE? 000000

   (The factory default code is 002750.) Use the left and right arrow keys to move among the digits; use the up range key to increment numbers and press the down range key to specify alphabetic letters. Confirm the code by pressing ENTER.
4. The Model 2750 allows you to define a new calibration code. Use the up and down range keys to toggle between yes and no. Choose N if you do not want to change the code. Choose Y if you want to change the code. The unit then prompts you to enter a new code. Enter the code, and press ENTER.

Remote calibration code

If you are performing calibration over the IEEE-488 bus or the RS-232 port, send this command to unlock calibration:

:CAL:PROT:CODE '<8-character string>'.

The default code command is:

:CAL:PROT:CODE 'KI002750'.

To change the code via remote, simply send the :CAL:PROT:CODE command twice, first with the present code, then with the new code.

Comprehensive calibration

The comprehensive calibration procedure calibrates the DCV, DCI, ACV, ACI, and ohms functions. You can also choose to calibrate only the DCV/DCI and resistance or ACV/ACI functions.

These procedures are usually the only calibration required in the field. Manufacturing calibration is normally done only at the factory, but it should also be done in the field if the unit has been repaired. See "Manufacturing calibration" at the end of this section for more information.

Calibration cycle

Perform comprehensive calibration at least once a year, or every 90 days to ensure the unit meets the corresponding specifications.

Recommended equipment

Table 2-1 lists the recommended equipment you need for comprehensive, DC-only, and AC-only calibration procedures. You can use alternate equipment, such as a DC transfer standard and characterized resistors, as long as the equipment has specifications at least as good as those listed in the table. In general, equipment uncertainty should be at least four times better than corresponding Model 2750 specifications.

Table 2-1
Recommended equipment for comprehensive calibration

Fluke 5700A Calibrator:				
DC Voltage	AC Voltage (1kHz, 50kHz)*	DC Current	AC Current (1kHz)	Resistance
10V: ±5ppm 100V: ±7ppm	10mV: ±710ppm 100mV: ±200ppm 1V: ±82ppm 10V: ±82ppm 100V: ±90ppm 700V: ±85ppm	10mA: ±60ppm 100mA: ±70ppm 1A: ±110ppm	100mA: ±190ppm 1A: ±690ppm 2A: ±670ppm	100Ω: ±17ppm 10kΩ: ±11ppm 100kΩ: ±13ppm 1MΩ: ±18ppm
Miscellaneous Equipment: Keithley 8610 low-thermal shorting plug. Double banana plug to double banana plug shielded cable. BNC to double banana plug shielded cable.				

*1kHz specifications. 10mV and 700V points require 1kHz only. All calibrator specifications are 90-day, 23°C ±5°C specifications and indicate total absolute uncertainty at specified output.

Aborting calibration

You can abort the front panel calibration process at any time by pressing EXIT. The instrument will then ask you to confirm your decision to abort with the following message:

ABORT CAL?

Press EXIT to abort calibration at this point, or press any other key to return to the calibration process.

NOTE The Model 2750 will not respond to any remote programming commands while the ABORT CAL? message is displayed.

Front panel calibration

Follow the steps in the following paragraphs in the order shown for comprehensive, DC only, and AC only calibration procedures.

The procedures for front panel calibration include:

- Preparing the Model 2750 for calibration
- Front panel short and open calibration
- DC voltage calibration
- Resistance calibration
- DC current calibration
- AC voltage calibration
- AC current calibration
- Setting calibration dates

Preparing the Model 2750 for calibration

1. Turn on the Model 2750, and allow it to warm up for at least two hours before performing a calibration procedure.
2. Start the calibration process as follows:
   a. Access the calibration menu by pressing SHIFT then TEST, then display TEST: CALIB using the up or down range key. Press ENTER.
   b. Use the up or down range key to scroll through the available calibration menu items until the unit displays RUN, then press ENTER.
   c. At the prompt, enter the calibration code. (The default code is 002750.) Use the left and right arrow keys to move among the digits; use the up range key to increment numbers, and press the down range key to specify alphabetic letters. Confirm the code by pressing ENTER.
   d. Choose N at the prompt to proceed without changing the code, then press ENTER.

3. Choose which of the calibration tests summarized in Table 2-2 you want to run at the CAL: RUN prompt. Use the up and down range keys to scroll through the options; select your choice by pressing ENTER.

Table 2-2
Comprehensive calibration procedures

Procedure	Menu Choice	Procedures
Full calibration	ALL	All comprehensive calibration steps (DC and AC).
DCV, DCI, and ohms	DC	DC voltage, DC current, and resistance calibration.
ACV and ACI	AC	AC voltage and AC current calibration.

Front panel short and open calibration

At the Model 2750 prompt for a front panel short, do the following:

1. Connect the Model 8610 low-thermal short to the instrument front panel INPUT and SENSE terminals as shown in Figure 2-1. Make sure the INPUTS button is not pressed in so that the front inputs are selected. Wait at least three minutes before proceeding to allow for thermal equilibrium.

Figure 2-1
Low-thermal short connections

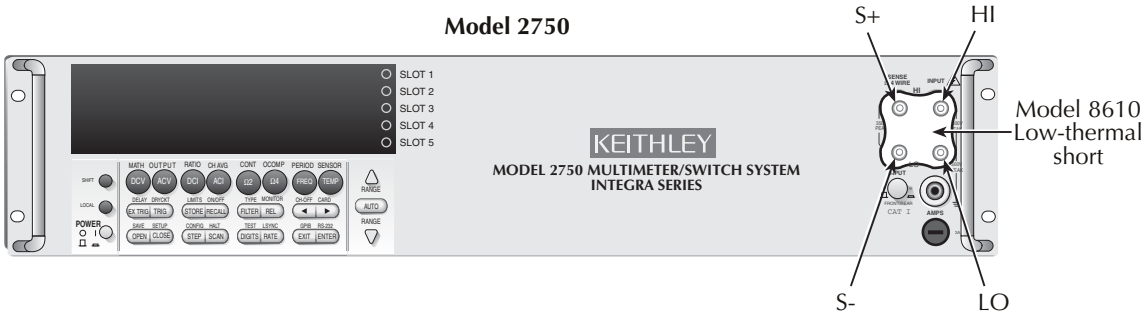

NOTE *Be sure to connect the low-thermal short properly to the HI, LO, and SENSE terminals. Keep drafts away from low-thermal connections to avoid thermal drift, which could affect calibration accuracy.*

2. Press ENTER to start short-circuit calibration. While the unit is calibrating, it will display:

   CALIBRATING

3. When the unit is finished with short-circuit calibration, it will display the following prompt:

   OPEN CIRCUIT

4. Remove the calibration short, and press ENTER. During this phase, the CALIBRATING message will be displayed.

NOTE *Be sure to minimize movement near front input terminals. Excessive movements can cause capacitive coupling errors, which could affect calibration accuracy.*

DC volts calibration

After the front panel short and open procedure, the unit will prompt you for the first DC voltage: +10V. Do the following:

1. Connect the calibrator to the Model 2750 as shown in Figure 2-2. Wait three minutes to allow for thermal equilibrium before proceeding.

Figure 2-2
Connections for DC volts and ohms calibration

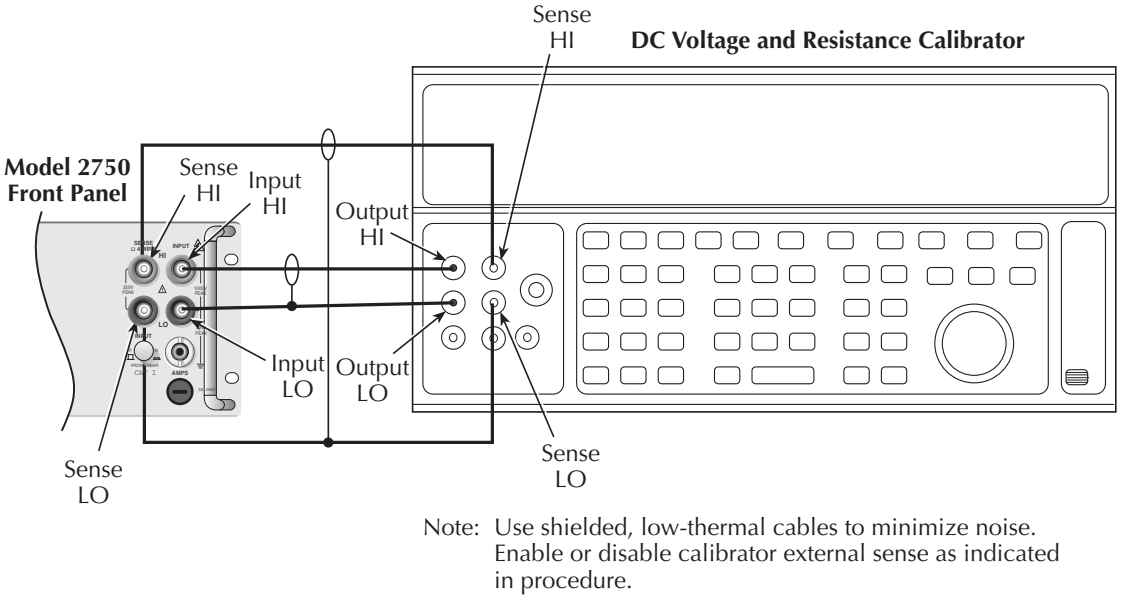

NOTE Although 4-wire connections are shown, the sense leads are connected and disconnected at various points in this procedure by turning calibrator external sense on or off as appropriate. If your calibrator does not have provisions for turning external sense on and off, disconnect the sense leads when external sensing is to be turned off, and connect the sense leads when external sensing is to be turned on.

2. Set the calibrator to output DC volts, and turn external sense off.
3. Perform the steps listed in Table 2-3 to complete DC volts calibration. For each calibration step:
   - Set the calibrator to the indicated value, and make sure it is in OPERATE.
   - Press the ENTER key to calibrate that step.
   - Wait until the Model 2750 finishes each step. (The unit will display the CALIBRATING message while calibrating.)

NOTE If your calibrator cannot output the values recommended in Table 2-3, use the left and right arrow keys, and the up and down range keys to set the Model 2750 display value to match the calibrator output voltage.

Table 2-3
DC volts calibration summary

Calibration Step	Calibrator Voltage	Allowable Range
+10V	+10.00000V	+9V to +11V
-10V	-10.00000V	-9V to -11V
100V	+100.0000V	+90V to +110V

Resistance calibration

Completing the 100V DC calibration step ends the DC voltage calibration procedure. The Model 2750 will then prompt you to connect 100Ω. Follow these steps for resistance calibration:

1. Set the calibrator output for resistance, and turn on external sense.

NOTE *Use external sense (4-wire Ω) when calibrating all resistance ranges. Be sure that the calibrator external sense mode is turned on.*

2. Perform the calibration steps summarized in Table 2-4. For each step:
   - Set the calibrator to the indicated value, and place the unit in operate. (If the calibrator cannot output the exact resistance value, use the Model 2750 left and right arrow keys and the range keys to adjust the Model 2750 display to agree with the actual calibrator resistance.)
   - Press the ENTER key to calibrate each point.
   - Wait for the Model 2750 to complete each step before continuing.

Table 2-4
Ohms calibration summary

Calibration Step	Calibrator Resistance*	Allowable Range
100Ω	100Ω	90Ω to 110Ω
10kΩ	10kΩ	9kΩ to 11kΩ
100kΩ	100kΩ	90kΩ to 110kΩ
1MΩ	1MΩ	0.9MΩ to 1.1MΩ

*Nominal resistance. Adjust Model 2750 calibration parameter to agree with actual value.

DC current calibration

After the 1MΩ resistance point has been calibrated, the unit will prompt you to apply 10mA. Follow these steps for DC current calibration:

1. Connect the calibrator to the AMPS and INPUT LO terminals of the Model 2750 as shown in Figure 2-3.

Figure 2-3
Connections for DC and AC amps calibration

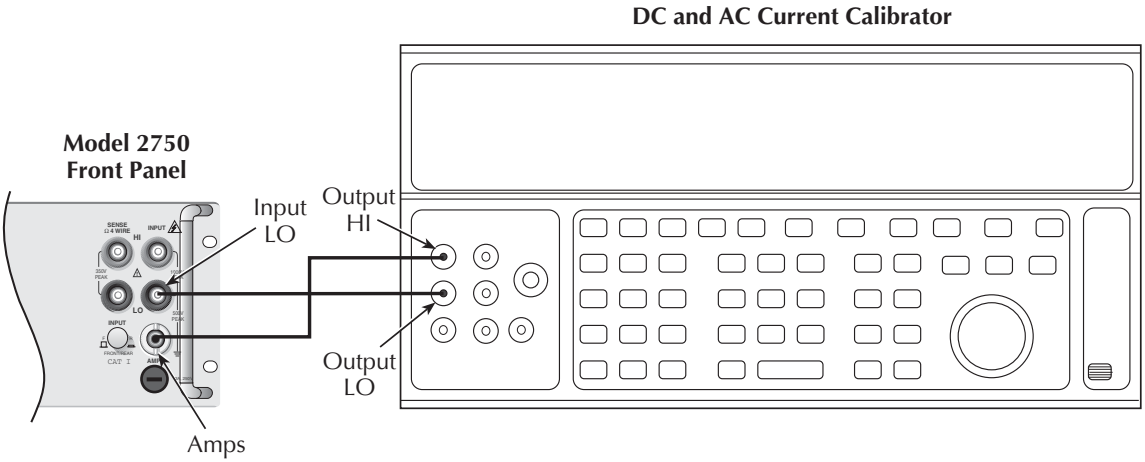

Note: Be sure calibrator is set for normal current output.

2. Calibrate each current step summarized in Table 2-5. For each step:
   - Set the calibrator to the indicated DC current, and make sure the unit is in OPERATE.
   - Make sure the Model 2750 display indicates the correct calibration current.
   - Press ENTER to complete each step.
   - Allow the Model 2750 to finish each step.

NOTE *If you are performing DC-only calibration, proceed to "Setting calibration dates and saving calibration."*

Table 2-5
DC current calibration summary

Calibration Step	Calibrator Current	Allowable Range
10mA	10.00000mA	9mA to 11mA
100mA	100.0000mA	90mA to 110mA
1A	1.000000A	0.9A to 1.1A

AC voltage calibration

Follow these steps for AC voltage calibration:

1. Connect the calibrator to the Model 2750 INPUT HI and LO terminals as shown in Figure 2-4.

Figure 2-4
Connections for AC volts calibration

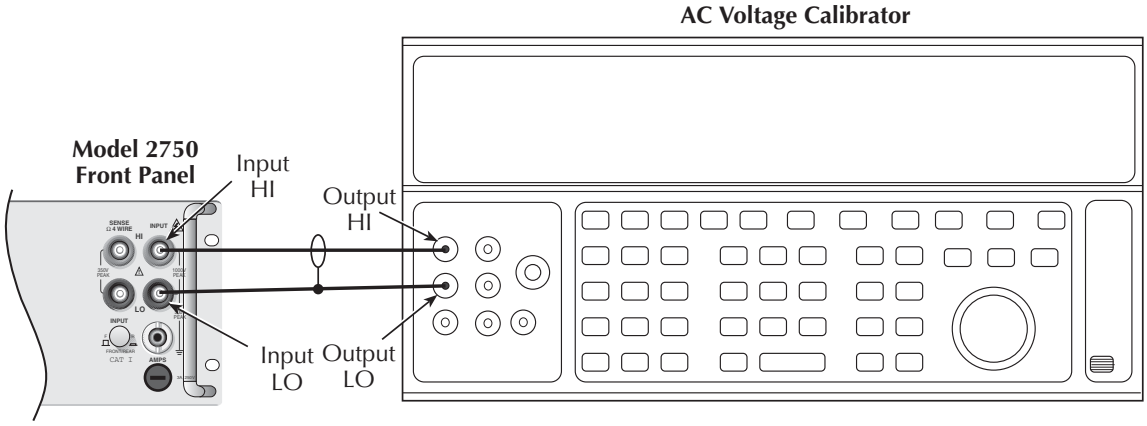

2. Perform the calibration steps summarized in Table 2-6. For each step:
   - Set the calibrator to the indicated value, and make sure the calibrator is in OPERATE.
   - Press ENTER to complete each step.
   - Wait until the Model 2750 completes each step.

Table 2-6
AC voltage calibration summary

Calibration Step	Calibrator Voltage, Frequency
10mV AC at 1kHz	10.00000mV, 1kHz
100mV AC at 1kHz	100.0000mV, 1kHz
100mV AC at 50kHz	100.0000mV, 50kHz
1V AC at 1kHz	1.000000V, 1kHz
1V AC at 50kHz	1.000000V, 50kHz
10V AC at 1kHz	10.00000V, 1kHz
10V AC at 50kHz	10.00000V, 50kHz
100V AC at 1kHz	100.0000V, 1kHz
100V AC at 50kHz	100.0000V, 50kHz
700V AC at 1kHz	700.000V, 1kHz

AC current calibration

After the 700VAC at 1kHz point has been calibrated, the unit will prompt you for 100mA at 1kHz. Follow these steps for AC current calibration:

1. Connect the calibrator to the AMPS and INPUT LO terminals of the Model 2750 as shown in Figure 2-3.
2. Perform the calibration steps summarized in Table 2-7. For each step:
   - Set the calibrator to the indicated current and frequency, and make sure the unit is in OPERATE.
   - Press ENTER to complete each calibration step.
   - Allow the unit to complete each step before continuing.

Table 2-7
AC current calibration summary

Calibration Step	Calibrator Current, Frequency
100mA at 1kHz	100.0000mA, 1kHz
1A at 1kHz	1.000000A, 1kHz
2A at 1kHz	2.000000A, 1kHz

Setting calibration dates and saving calibration

At the end of the calibration procedure, the instrument will display the CALIBRATION COMPLETE message. Press ENTER to continue, and the Model 2750 will prompt you to enter the calibration date and the calibration due date. Set these dates as follows:

1. At the CAL DATE: prompt, use the left and right arrow keys and the range keys to set the calibration date, then press ENTER.
2. The unit will then prompt you to enter the next calibration due date with this prompt: CAL NDUE:. Use the left and right arrow keys and the range keys to set the calibration due date, then press ENTER.
3. The unit will prompt you to save new calibration constants with this message: SAVE CAL? YES. To save the new constants press ENTER. If you do not want to save the new constants press the down range key to toggle to NO, then press ENTER.

NOTE *Calibration constants calculated during the present calibration procedure will not be saved unless you choose the YES option. Previous calibration constants will be retained if you select NO.*

Remote calibration

Follow the steps in this section to perform comprehensive procedures via remote. See Appendix B for a detailed list and description of remote calibration commands.

When sending calibration commands, be sure that the Model 2750 completes each step before sending the next command. You can do so either by observing the front panel CALIBRATING message, or by detecting the completion of each step over the bus. (See Appendix B, "Detecting calibration step completion.")

The procedures for calibrating the Model 2750 via remote include:

- Preparing the Model 2750 for calibration
- Front panel short and open calibration
- DC volts calibration
- Resistance calibration
- DC current calibration
- AC volts calibration
- AC current calibration
- Programming calibration dates
- Saving calibration constants
- Locking out calibration

NOTE *As with front panel calibration, you can choose to perform comprehensive, DC-only, or AC-only calibration. Be sure to include a space character between each command and parameter.*

Preparing the Model 2750 for calibration

1. Connect the Model 2750 to the IEEE-488 bus of the computer using a shielded IEEE-488 cable, such as the Keithley Model 7007, or connect the unit to a computer through the RS-232 port using a straight-through 9-pin to 9-pin cable (use a 9-25-pin adapter if necessary).
2. Turn on the Model 2750, and allow it to warm up for at least two hours before performing calibration.
3. Make sure the primary address of the Model 2750 is the same as the address specified in the program that you will be using to send commands. (Use the GPIB key.)
4. Unlock the calibration function by sending this command:

   :CAL:PROT:CODE 'KI002750'

   (The above command shows the default code, KI002750. Substitute the correct code if changed.)
5. Send the following command to initiate calibration:

   :CAL:PROT:INIT

NOTE DC calibration can be partially performed if desired. For example, to calibrate only the 100¾ range, perform the DCU and 100¾ range steps, then save calibration using :CAL:PROT:SAVE. Uncalibrated ranges will retain previous calibration constants and can be verified as discussed in Section 1.

Short and open calibration

1. Connect the Model 8610 low-thermal short to the instrument INPUT and SENSE terminals as shown in Figure 2-1. Make sure the INPUTS button is not pressed in so that the front inputs are active. Wait at least three minutes before proceeding to allow for thermal equilibrium.

NOTE Be sure to connect the low-thermal short properly to the HI, LO, and SENSE terminals. Keep drafts away from low-thermal connections to avoid thermal drift, which could affect calibration accuracy.

2. Send the following command:
   :CAL:PROT:DC:STEP1
3. After the Model 2750 completes this step, remove the low-thermal short, and then send this command:
   :CAL:PROT:DC:STEP2

NOTE Be sure to minimize movement near front input terminals. Excessive movements can cause capacitive coupling errors, which could affect calibration accuracy.

DC volts calibration

After the front panel short and open steps, do the following:

1. Connect the calibrator to the Model 2750 as shown in Figure 2-2. Allow three minutes for thermal equilibrium.

NOTE Although 4-wire connections are shown, the sense leads are connected and disconnected at various points in this procedure by turning calibrator external sense on or off as appropriate. If your calibrator does not have provisions for turning external sense on and off, disconnect the sense leads when external sensing is to be turned off, and connect the sense leads when external sensing is to be turned on.

2. Perform the calibration steps summarized in Table 2-8. For each step:
   - Set the calibrator to the indicated voltage, and make sure the unit is in operate. (Use the recommended voltage if possible.)
   - Send the indicated programming command. (Change the voltage parameter if you are using a different calibration voltage.)
   - Wait until the Model 2750 completes each step before continuing.

*NOTE Ensure the calibrator has settled to the final value. You can do so by verifying that the "Settled" indicator is off, or by using the *OPC? (operation complete) query.*

Table 2-8
DC voltage calibration programming steps

Calibration Step	Calibrator Voltage	Calibration Command*	Parameter Range
+10V	+10.00000V	:CAL:PROT:DC:STEP3 10	9 to 11
-10V	-10.00000V	:CAL:PROT:DC:STEP4 -10	-9 to -11
100V	100.0000V	:CAL:PROT:DC:STEP5 100	90 to 110

*Use recommended value where possible. Change parameter accordingly if using a different calibrator voltage.

Resistance calibration

Follow these steps for resistance calibration:

1. Set the calibrator to the resistance mode, and turn on external sensing.

NOTE Use external sense (4-wire Ω) when calibrating all resistance ranges. Be sure that the calibrator external sense mode is turned on.

2. Perform the calibration steps summarized in Table 2-9. For each step:
   - Set the calibrator to the indicated resistance, and make sure the unit is in operate. (Use the recommended resistance or the closest available value.)
   - Send the indicated programming command. (Change the command parameter if you are using a different calibration resistance than that shown.)
   - Wait until the Model 2750 completes each step before continuing.

Table 2-9
Resistance calibration programming steps

Calibration Step	Calibrator Resistance	Calibration Command*	Parameter Range
100Ω	100Ω	:CAL:PROT:DC:STEP6 100	90 to 110
10kΩ	10kΩ	:CAL:PROT:DC:STEP7 10E3	9E3 to 11E3
100kΩ	100kΩ	:CAL:PROT:DC:STEP8 100E3	90E3 to 110E3
1MΩ	1MΩ	:CAL:PROT:DC:STEP9 1E6	900E3 to 1.1E6

*Use exact calibrator resistance value for parameter.

DC current calibration

After the 1MΩ resistance point has been calibrated, follow these steps for DC current calibration:

1. Connect the calibrator to the AMPS and INPUT LO terminals of the Model 2750 as shown in Figure 2-3.
2. Perform the calibration steps listed in Table 2-10. For each step:
   - Set the calibrator to the indicated current, and make sure the unit is in operate. (Use the recommended current if possible.)
   - Send the indicated programming command. (Change the current parameter if you are using a different calibration current.)
   - Wait until the Model 2750 completes each step before continuing.

NOTE *If you are performing DC-only calibration, proceed to "Programming calibration dates."*

Table 2-10
DC current calibration programming steps

Calibration Step	Calibrator Current	Calibration Command*	Parameter Range
10mA	10.00000mA	:CAL:PROT:DC:STEP10 10E-3	9E-3 to 11E-3
100mA	100.00000mA	:CAL:PROT:DC:STEP11 100E-3	90E-3 to 110E-3
1A	1.000000A	:CAL:PROT:DC:STEP12 1	0.9 to 1.1

*Change parameter if using different current.

AC voltage calibration

Follow these steps for AC voltage calibration:

1. Connect the calibrator to the Model 2750 INPUT HI and LO terminals as shown in Figure 2-4.
2. Perform the calibration steps summarized in Table 2-11. For each step:
   - Set the calibrator to the indicated voltage and frequency, and make sure the unit is in operate. (You must use the stated voltage and frequency.)
   - Send the indicated programming command.
   - Wait until the Model 2750 completes each step before continuing.

Table 2-11
AC voltage calibration programming steps

Calibration Step	Calibrator Voltage, Frequency	Calibration Command
10mV AC at 1kHz	10.00000mV, 1kHz	:CAL:PROT:AC:STEP1
100mV AC at 1kHz	100.0000mV, 1kHZ	:CAL:PROT:AC:STEP2
100mV AC at 50kHz	100.0000mV, 50kHz	:CAL:PROT:AC:STEP3
1VAC at 1kHz	1.000000V, 1kHz	:CAL:PROT:AC:STEP4
1VAC at 50kHz	1.000000V, 50kHz	:CAL:PROT:AC:STEP5
10VAC at 1kHz	10.00000V, 1kHz	:CAL:PROT:AC:STEP6
10VAC at 50kHz	10.00000V, 50kHz	:CAL:PROT:AC:STEP7
100VAC at 1kHz	100.0000V, 1kHz	:CAL:PROT:AC:STEP8
100VAC at 50kHz	100.0000V, 50kHz	:CAL:PROT:AC:STEP9
700VAC at 1kHz	700.000V, 1kHz	:CAL:PROT:AC:STEP10

AC current calibration

Follow these steps for AC current calibration:

1. Connect the calibrator to the AMPS and INPUT LO terminals of the Model 2750 as shown in Figure 2-3.
2. Perform the calibration steps summarized in Table 2-12. For each step:
   - Set the calibrator to the indicated current and frequency, and make sure the unit is in operate. (You must use the stated current and frequency.)
   - Send the indicated programming command.
   - Wait until the Model 2750 completes each step before continuing.

Table 2-12
AC current calibration programming steps

Calibration Step	Calibrator Current, Frequency	Calibration Command
100mA at 1kHz	100.0000mA, 1kHz	:CAL:PROT:AC:STEP11
1A at 1kHz	1.000000A, 1kHz	:CAL:PROT:AC:STEP12
2A at 1kHz	2.000000A, 1kHz	:CAL:PROT:AC:STEP13

Programming calibration dates

Program the present calibration date and calibration due date by sending the following commands:

:CAL:PROT:DATE <year>, <month>, <day>
:CAL:PROT:NDUE <year>, <month>, <day>

For example, the following commands assume calibration dates of 3/5/2001 and 3/5/2002 respectively:

:CAL:PROT:DATE 2001, 3, 5
:CAL:PROT:NDUE 2002, 3, 5

Saving calibration constants

After completing the calibration procedure, send the following command to save the new calibration constants:

:CAL:PROT:SAVE

NOTE *Calibration constants will not be saved unless the :CAL:PROT:SAVE command is sent.*

Locking out calibration

After saving calibration, send the following command to lock out calibration:

:CAL:PROT:LOCK

Manufacturing calibration

The manufacturing calibration procedure is normally performed only at the factory, but the necessary steps are included here in case the unit is repaired, and the unit requires these calibration procedures.

NOTE *If the unit has been repaired, the entire comprehensive calibration procedure should also be performed in addition to the manufacturing calibration procedure.*

Recommended test equipment

Table 2-13 summarizes the test equipment required for the manufacturing calibration steps. In addition, you will need the calibrator (Table 2-1) and signal generator to complete the comprehensive calibration steps.

Table 2-13
Recommended equipment for manufacturing calibration

Stanford Research Systems DS345 Function Generator: 1V RMS, 3Hz, ±5ppm 1V RMS, 1kHz, ±5ppm
Keithley Model 2001 or 2002 Digital Multimeter: 1V, 3Hz AC, ±0.13%
Keithley 7797 Calibration/Extender Board

Extender board preparation

Before performing manufacturing calibration, short the output HI, LO, SHI, and SLO terminals of the 7797 Calibration/Extender together using clean, solid copper wires. These connections will form a low-thermal short necessary for the manufacturing calibration procedure. The Calibration Extender Board should then be installed in scanner Slot #1.

Unlocking manufacturing calibration

To unlock manufacturing calibration, press and hold in the OPEN key while turning on the power.

Measuring function generator signal amplitude

The 3Hz function generator signal amplitude must be accurately measured using the digital multimeter listed in Table 2-13. Proceed as follows:

1. Connect the function generator output to the digital multimeter INPUT jacks. (See Figure 2-5 for typical connections.)
2. Turn on the function generator and multimeter, and allow a two-hour warm-up period before measuring.
3. Set the function generator to output a 1V RMS sine wave at 3Hz; measure and record the signal amplitude.

Front panel manufacturing calibration

1. Install the shorted calibration extender board (see "Extender board preparation" earlier in this section) in scanner card Slot 1, and select the rear inputs with the INPUTS switch. Allow three minutes for thermal equilibrium.
2. Press in and hold the OPEN key while turning on the power.
3. Press SHIFT then TEST then display CALIB: TEST with the up or down range key. Press ENTER, select RUN, then enter the appropriate calibration code (default: 002750).
4. Select ALL at the CAL:RUN prompt.
5. Press ENTER to perform the first manufacturing calibration step.
6. Perform the entire front panel comprehensive calibration procedure discussed earlier in this section. (See "Comprehensive calibration" earlier in this section.)
7. Connect the function generator to the Model 2750 front panel INPUT jacks as shown in Figure 2-5. Select the front input jacks with the INPUTS switch.

Figure 2-5
Function generator connections for manufacturing calibration

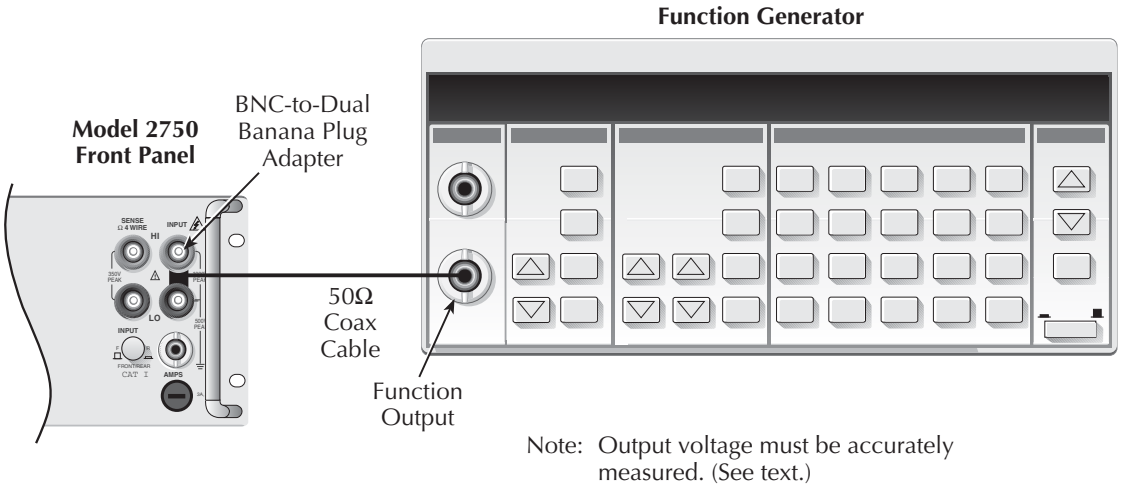

8. After the last AC current calibration step, the instrument will prompt you to enter 3Hz at 1V RMS and 1kHz with the following prompts:
   - Low-frequency cal: Set the function generator to output a 1V RMS, 3Hz sine wave. Use the left and right arrow keys, and the range keys to adjust the display to agree with the generator amplitude you measured previously, then press ENTER.
   - Frequency cal: Set the function generator to output a 1V RMS, 1kHz sine wave. Enter 1.000000kHz at the prompt, then press ENTER.
9. Set the calibration dates, then save calibration to complete the process.

Remote manufacturing calibration

1. Install the shorted calibration extender board (see "Extender board preparation" earlier in this section) in scanner card Slot 1, and select the rear inputs with the INPUTS switch. Allow three minutes for thermal equilibrium.
2. Press in and hold the OPEN key while turning on the power.
3. Enable calibration by sending the :CODE command. For example, the default command is:

   :CAL:PROT:CODE 'KI002750'
4. Initiate calibration by sending the following command:

   :CAL:PROT:INIT
5. Calibrate step 0 with the following command:

   :CAL:PROT:DC:STEP0

6. Perform the entire remote comprehensive calibration procedure discussed earlier in this section. (See "Comprehensive calibration" earlier in this section.)
7. Connect the function generator to the Model 2750 INPUT jacks as shown in Figure 2-5. Select the front input jacks with the INPUTS switch.
8. Set the generator to output a 1V RMS, 3Hz sine wave, then send the following command:

   :CAL:PROT:AC:STEP14 <Cal_voltage>

   Here <Cal_voltage> is the actual 3Hz generator signal amplitude you measured previously.
9. Set the generator to output a 1V RMS, 1kHz sine wave, then send the following command:

   :CAL:PROT:AC:STEP15 1E3
10. Send the following commands to set calibration dates, save calibration, and lock out calibration:

    :CAL:PROT:DATE <year>, <month>, <day>
    :CAL:PROT:NDUE <year>, <month>, <day>
    :CAL:PROT:SAVE
    :CAL:PROT:LOCK

Model 7700 calibration

The following procedures calibrate the temperature sensors on the Model 7700 plug-in modules.

NOTE *For additional information about the Keithley modules, refer to the module documentation.*

Recommended test equipment

In order to calibrate the Model 7700, you will need equipment summarized in Table 2-14.

Table 2-14
Recommended equipment for Model 7700 calibration

Digital Thermometer: 18 to 28°C, ±0.1°C
Keithley 7797 Calibration/Extender Board

Extender board connections

The Model 7700 being calibrated should be connected to the 7797 Calibration/Extender Board, and the extender board should then be installed in scanner Slot #1. Note that the module being calibrated will be external to the Model 2750 to avoid card heating during calibration.

Model 7700 calibration

NOTE Before calibrating the Model 7700, make sure that power has been removed from the card for at least two hours to allow card circuitry to cool down. After turning on the power during the calibration procedure, complete the procedure as quickly as possible to minimize card heating that could affect calibration accuracy. Allow the Model 2750 to warm up for at least two hours.

Front panel Model 7700 calibration

1. Connect the Model 7700 to the Model 7797 Calibration/Extender Board (see "Extender board connections").
2. With the power off, install the Model 7700/7797 combination in Slot 1, and select the rear inputs with the INPUTS switch. Allow three minutes for thermal equilibrium.
3. Accurately measure and record the cold temperature of the Model 7700 card surface at the center of the card with an RTD sensor.
4. Press in and hold the Model 2750 OPEN key while turning on the power.
5. Press SHIFT then TEST, then display TEST:CALIB with the up or down range key. Press ENTER, select RUN, then enter the appropriate calibration code (default: 002750).
6. Using the up or down range key, select CARD at the CAL:RUN prompt, then press ENTER.
7. Set the display value to the cold calibration temperature (°C) you measured in Step 3, then press ENTER to complete Model 7700 calibration.

Remote Model 7700 calibration

1. Connect the Model 7700 to the 7797 Calibration/Extender Board (see "Extender board connections" above).
2. With the power off, install the Model 7700/7797 combination in Slot 1, and select the rear inputs with the INPUTS switch. Allow three minutes for thermal equilibrium.
3. Accurately measure and record the cold temperature of the Model 7700 card surface at the center of the card.
4. Press in and hold the Model 2750 OPEN key while turning on the power.
5. Enable calibration by sending the :CODE command. For example, the default command is:

   :CAL:PROT:CODE 'KI002750'
6. Initiate calibration by sending the following command:

   :CAL:PROT:CARD1:INIT
7. Calibrate the Model 7700 with the following command:

   :CAL:PROT:CARD1:STEP0 <temp>

   Here <temp> is the cold calibration temperature (°C) measured in Step 3.
8. Send the following commands to save calibration and lock out calibration:

   :CAL:PROT:CARD1:SAVE
   :CAL:PROT:CARD1:LOCK

3
Routine Maintenance

Introduction

The information in this section deals with routine type maintenance and includes procedures for setting the line voltage, replacing the Model 2750 line and front terminal AMPS fuses, and replacing the amps fuses for the Models 7700 plug-in module. Replacement of the Model 2750 non-volatile RAM battery and reading module relay card closure count is also covered.

Setting the line voltage and replacing the line fuse

WARNING Disconnect the line cord at the rear panel, and remove all test leads connected to the instrument (front and rear) before replacing the line fuse.

The power line fuse is located in the power module next to the AC power receptacle (Figure 3-1). If the line voltage must be changed, or if the line fuse requires replacement, perform the following steps:

1. Place the tip of a flat-blade screwdriver into the power module by the fuse holder assembly (Figure 3-1). Gently push in and to the left. Release pressure on the assembly, and its internal spring will push it out of the power module.

CAUTION For continued protection against fire or instrument damage, replace the fuse only with the type and rating listed. If the instrument repeatedly blows fuses, locate and correct the cause of the trouble before replacing the fuse.

2. Remove the fuse, and replace it with the type listed in Table 3-1.

Figure 3-1
Power module

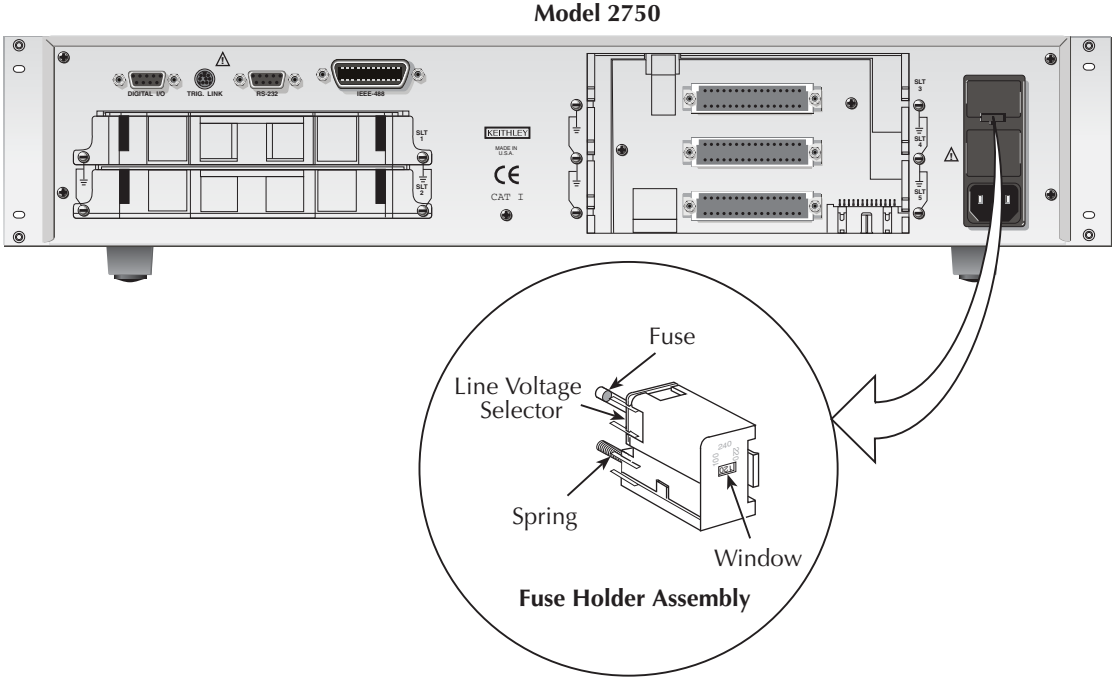

CAUTION Operating the Model 2750 on the wrong line voltage may result in instrument damage.

3. If configuring the instrument for a different line voltage, remove the line voltage selector from the assembly, and rotate it to the proper position. When the selector is installed into the fuse holder assembly, the correct line voltage appears inverted in the window.
4. Install the fuse holder assembly into the power module by pushing it in until it locks in place.

Table 3-1
Power line fuse

Line Voltage	Rating	Keithley Part No.
100/120V	0.630A, 250V, 5 × 20 mm, slow-blow	FU-106-.630
200/240V	0.315A, 250V, 5 × 20 mm, slow-blow	FU-106-.315

Replacing the AMPS fuse

The front panel AMPS fuse protects the Model 2750 AMPS current input from an over-current condition. Follow the steps below to replace the AMPS fuse.

WARNING Make sure the instrument is disconnected from the power line and other equipment before replacing the AMPS fuse.

1. Turn off the power, and disconnect the power line and test leads.
2. Using a screwdriver, rotate the fuse carrier one-quarter turn counterclockwise (Figure 3-2). Release pressure on the jack, and its internal spring will push the fuse carrier out of the socket.

CAUTION Do not use a fuse with a higher current rating than specified or instrument damage may occur. If the instrument repeatedly blows fuses, locate and correct the cause of the trouble before replacing the fuse.

3. Remove the fuse, and replace it with the same type: 3A, 250V, fast-blow, Keithley part number FU-99-1.
4. Install the new fuse by reversing the above procedure.

Figure 3-2
AMPS fuse

Model 2750

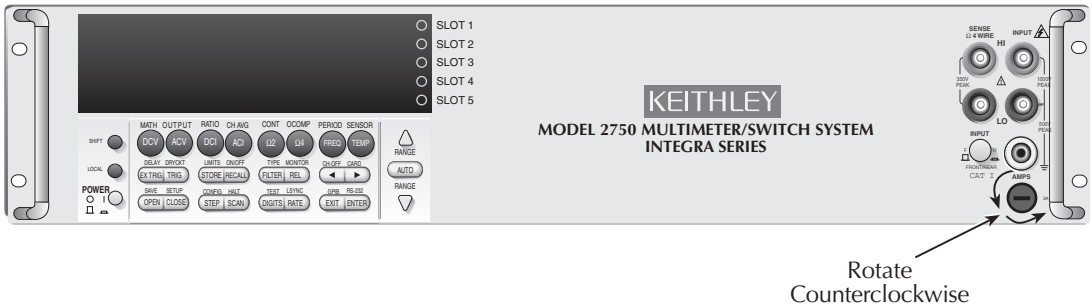

Replacing Model 7700 plug-in module amps fuses

WARNING The information in this section is intended only for qualified service personnel. Do not perform these procedures unless you are qualified to do so.

WARNING Make sure that all plug-in module connections are de-energized and disconnected before replacing module amps fuses.

1. Turn off the power, and disconnect the power line and external connections from the Model 7700.
2. Open the Model 7700 top cover.
3. Locate the amps fuses for CH21 and CH22 (Figure 3-3).
4. Remove the circuit board from the bottom plastic housing by removing the two bottom screws.

Figure 3-3
Model 7700 amps fuses

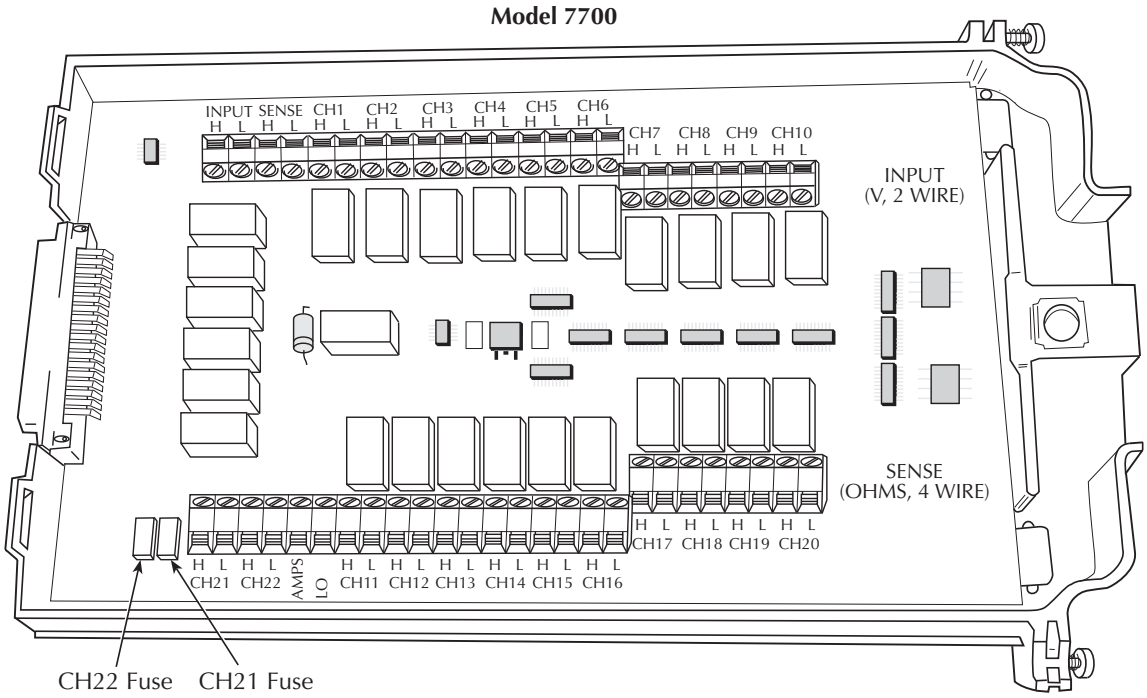

5. De-solder the blown CH21 or CH22 fuse as required, taking care not to damage the circuit board or spread solder flux around the board.

CAUTION Do not use a fuse with a higher current rating than specified or module damage may occur.

6. Install a new 3A, 250V fast-blow fuse, Keithley part number FU-107-1.
7. Solder the new fuse in place using organic (OA based) flux solder, again taking care not to damage the circuit board or spread solder flux around the board.
8. Carefully clean the repaired area of the circuit board with a foam tipped swab or brush dipped in pure water, then blow dry the board with dry nitrogen gas. Allow the board to dry for several hours in a 50°C low-humidity environment before use.
9. Reinstall the circuit board into the plastic housing, then close the top cover.

Replacing non-volatile RAM battery

The Model 2750 has a three-year lithium battery for non-volatile RAM. Use the procedure below to replace the battery, if required. Refer to the disassembly procedures in Section 5 and the parts list and component layout drawings at the end of Section 6 for more information.

WARNING There is a danger of explosion if the battery is incorrectly replaced. Replace only with the same or equivalent type recommended by the manufacturer. Dispose of used batteries according to federal, state, and local laws.

The following procedure is intended only for qualified service personnel. Do not perform this procedure unless you are qualified to do so.

Disconnect the line cord and all connecting wires from the Model 2750 before removing the top cover.

WARNING The precautions below must be followed to avoid personal injury.

- Wear safety glasses or goggles when working with lithium batteries.
- Do not short the battery terminals together.
- Keep lithium batteries away from all liquids.
- Do not attempt to recharge lithium batteries.
- Observe proper polarity when installing the battery.
- Do not incinerate or otherwise expose the battery to excessive heat (>60°C).
- Bulk quantities of lithium batteries should be disposed of as hazardous waste.
- Dispose of used batteries according to all federal, state, and local laws.

Replace the battery as follows:

1. Before replacing the battery, refer to the troubleshooting procedures in Table 4-4 in Section 4 to determine if the battery requires replacement
2. Remove the Model 2750 top cover using the disassembly procedures in Section 5.
3. Locate battery BT100 using the motherboard component layout drawing at the end of Section 6.
4. De-solder the battery from the top side of the circuit board.
5. Install a new battery, Keithley part number BA-51, taking care to observe proper polarity.
6. Solder the battery connection to the circuit board using organic (OA-based) flux solder.
7. After soldering, remove all flux using a foam-tipped swab or brush dipped in pure water. Blow dry the board with dry nitrogen gas, then allow the board to dry for several hours in a 50°C, low-humidity environment before use.
8. Reinstall the top cover by following the disassembly procedures in Section 5 in reverse order.

Plug-in module relay closure count

The Model 2750 keeps an internal count of the number of times each module relay has been closed. This count will help you determine if and when any relays require replacement (see module contact life specifications). The count can be read or reset only via remote as outlined below.

Closure count commands

Table 3-2 summarizes closure count commands.

Table 3-2
Closure count commands

Command	Description
:ROUTe	Route subsystem.
:CLOSe	Path to CLOSe commands.
:COUNt? (@clist)	Query count for channels in clist (channel list).
:INTerval < NRf>	Set count update interval in minutes (10 to 1440).
:INTerval?	Query count update interval.
:RCOunt (@clist)	Reset count for channels in clist.*

* Unit must be in manufacturing calibration mode. See text below.

Reading relay closure count

To determine the closure count of specific channels, send this query via remote:

:ROUTe:CLOSe:COUNt? (@clist)

Here, clist is the summary of channels. For example, to determine the closure count of channels 1 and 4 of a module in slot 1, the following query would be sent:

:ROUT:CLOS:COUN? (@101,104)

The following query would determine the closure count of slot 1 module channels 1 through 10:

:ROUT:CLOS:COUN? (@101:110)

Resetting relay closure count

NOTE The Model 2750 must be in the manufacturing calibration mode to reset the closure count. To do so, press and hold the OPEN key while turning on the power, then send the :CAL:PROT:CODE "code" to unlock calibration (default code: KI002750). After resetting relay counts, send :CAL:PROT:LOCK to lock out calibration.

To reset the relay closure count of specific channels to 0, send this command via remote:

:ROUTe:CLOSe:RCOunt (@clist)

Again clist is the summary of channels to be reset. For example, the following command resets channels 2 and 7 of a module in slot 1 to 0:

:ROUT:CLOS:RCO (@102,107)

The following command resets the count of slot 1 module channels 1 through 10:

:ROUT:CLOS:RCO (@101:110)

Setting count update interval

Relay closure counts are updated in temporary RAM every time a channel is closed regardless of how it was closed: by an SCPI command, front panel control, or during a scan. These counts are permanently written to the EEPROM on the card only at a user-settable time interval (which has a factory default of 15 minutes), or whenever the counts are queried. Valid intervals (set in integer number of minutes) are between 10 and 1440 minutes (24 hrs). Relay closures are counted only when a relay cycles from open to closed state. If you send multiple close commands to the same channel without sending an open command, only the first closure will be counted.

The lower the interval, the less chance there is of losing relay counts due to power failures. However, writing to the EEPROM more often may reduce scanning throughput. The higher the interval, the less scanning throughput is reduced, but more relay counts may be lost in the event of a power failure.

To set the count update interval, send this command:

:ROUTe:CLOSe:COUNt:INTerval <interval>

For example, to set the interval to 30 minutes, send this command:

:ROUT:CLOS:COUN:INT 30

Rack mounting

Rack mount kit

Model 4288-7 rack mount kit — Mounts a Model 2750 in a standard 19-inch rack. Includes rear brackets to provide additional support for a mainframe that has two or more switching modules installed.

NOTE *The Model 2750 includes hardware that allows it to be mounted to the front rails of a standard 19-inch rack. With two or more switching modules installed, rear support brackets may be required. The Model 4288-7 rack mount kit includes rear support brackets.*

Rack mount procedure

The Model 2750 can be mounted in a standard 19-inch rack. For a mainframe that has one or no switching modules installed, the Model 2750 can be secured to the front rails of the rack.

The hardware necessary to secure the mainframe to the front rails of the rack is supplied with the Model 2750. The supplied hardware kit includes four dress screws and four retaining clips. Each retaining clip has a captive nut.

Perform the following steps to mount the Model 2750 to the front rails of the rack:

WARNING Make sure the Model 2750 is turned off, the line cord is disconnected, and it is not connected to any external circuitry.

1. Select a location in the rack. The mainframe takes up 3.5 inches of vertical space.

2. Using Figure 3-4 as a guide, install two retaining clips on the left front rail. Slide each retaining clip over a mounting hole such that the captive nut is positioned on the inside of the rack cabinet. In a similar manner, install two retaining clips on the right front rail.

Figure 3-4
Rack preparation

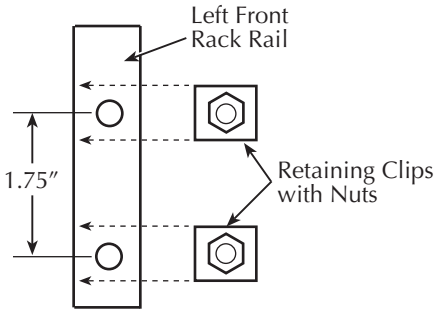

3. Remove the four foot assemblies from the bottom of the Model 2750. The retaining screw for an assembly is located under the rubber foot. Simply pull off the rubber feet to gain access to the screws. Retain these foot assemblies for future use.
4. Position the Model 2750 in the rack and loosely attach the front panel to the rack rails using the four supplied dress screws.
5. Tighten the four dress screws.

CAUTION For a Model 2750 that has two or more installed switching modules, rear brackets may be required to support the additional weight. The Model 4288-7 is a rack mount kit for the Model 2750 that uses rear support brackets.

4
Troubleshooting

Introduction

This section of the manual will assist you in troubleshooting and repairing the Model 2750. Included are self-tests, test procedures, troubleshooting tables, and circuit descriptions. It is left to the discretion of the repair technician to select the appropriate tests and documentation needed to troubleshoot the instrument. Refer to the disassembly procedures in Section 5 and the parts lists in Section 6 for further information.

WARNING The information in this section is intended only for qualified service personnel. Do not perform these procedures unless you are qualified to do so. Some of these procedures may expose you to hazardous voltages that could cause personal injury or death. Use caution when working with hazardous voltages.

The metal shield located on the motherboard is at analog LO potential and may have hazardous voltages. To avoid a possible shock hazard, connect the metal shield to chassis ground before servicing.

Repair considerations

Before making any repairs to the Model 2750, be sure to read the following considerations.

CAUTION The PC boards are built using surface mount techniques and require specialized equipment and skills for repair. If you are not equipped and/or qualified, it is strongly recommended that you send the unit back to the factory for repairs or limit repairs to the PC board replacement level. Without proper equipment and training, you could damage a PC board beyond repair.

- Repairs will require various degrees of disassembly. However, it is recommended that the Front Panel Tests be performed prior to any disassembly. The disassembly instructions for the Model 2750 are contained in Section 5 of this manual.
- Do not make repairs to surface mount PC boards unless equipped and qualified to do so (see previous CAUTION).
- When working inside the unit and replacing parts, be sure to adhere to the handling precautions and cleaning procedures explained in Section 5.
- Many CMOS devices are installed in the Model 2750. These static-sensitive devices require special handling as explained in Section 5.
- Whenever a circuit board is removed or a component is replaced, the Model 2750 must be recalibrated. See Section 2 for details on calibrating the unit.

Power-on self-test

During the power-on sequence, the Model 2750 will perform a checksum test on its EPROM (U156 and U157) and test its RAM (U151, U152, U164 and U193). If one of these tests fails, the instrument will lock up.

Front panel tests

There are two front panel tests: one to test the functionality of the front panel keys and one to test the display. In the event of a test failure, refer to "Display board checks" for details on troubleshooting the display board.

KEY test

The KEY test allows you to check the functionality of each front panel key. Perform the following steps to run the KEY test:

1. Press SHIFT and then TEST to access the self-test options.
2. Use the up or down RANGE key to display "TEST: KEY."
3. Press ENTER to start the test. When a key is pressed, the label name for that key is displayed to indicate that it is functioning properly. When the key is released, the message "NO KEY PRESS" is displayed.
4. Pressing EXIT tests the EXIT key. However, the second consecutive press of EXIT aborts the test and returns the instrument to normal operation.

DISP test

The display test allows you to verify that each segment and annunciator in the vacuum fluorescent display is working properly. Perform the following steps to run the display test:

1. Press SHIFT and then TEST to access the self-test options.
2. Use the up or down RANGE key to display "TEST: DISP."
3. Press ENTER to start the test. There are five parts to the display test. Each time ENTER is pressed, the next part of the test sequence is selected. The five parts of the test sequence are as follows:
   a. All annunciators are displayed.
   b. The segments of each digit are sequentially displayed.
   c. The 12 digits (and annunciators) are sequentially displayed.
   d. The annunciators located at either end of the display are sequentially displayed.
   e. The LEDs are displayed.
4. When finished, abort the display test by pressing EXIT. The instrument returns to normal operation.

Principles of operation

The following information is provided to support the troubleshooting tests and procedures covered in this section of the manual. Refer to the following block diagrams:

Figure 4-1 — Power supply block diagram.

Figure 4-2 — Digital circuitry block diagram.

Figure 4-3 — Analog circuitry block diagram.

Power supply

The following information provides some basic circuit theory that can be used as an aid to troubleshoot the power supply. A block diagram of the power supply is shown in Figure 4-1.

Figure 4-1
Power supply block diagram

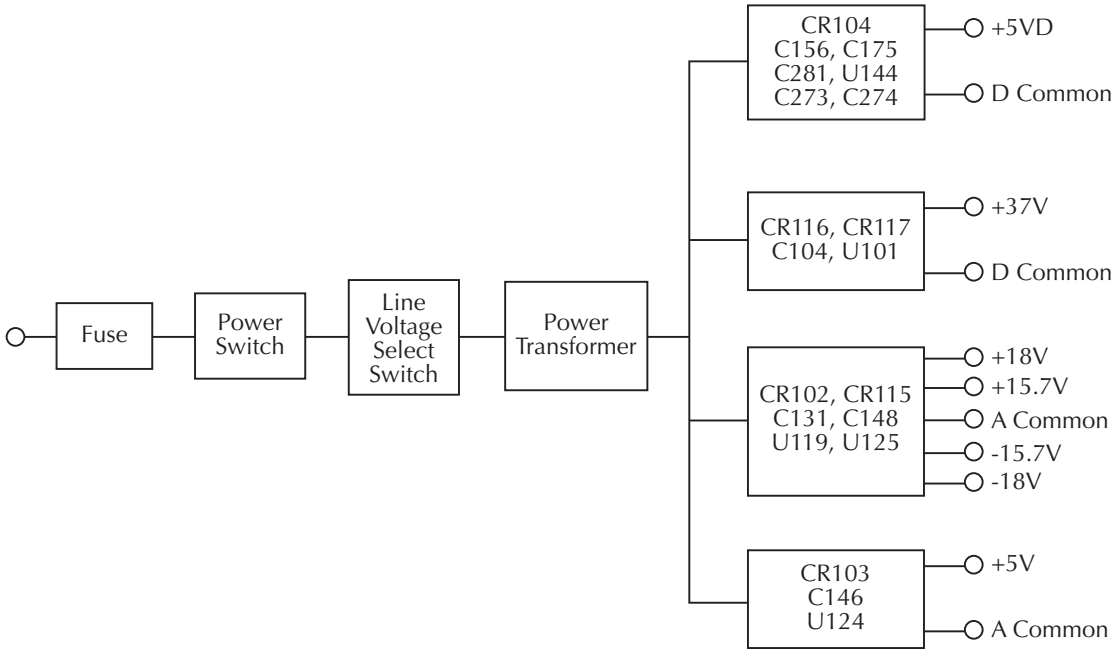

AC power is applied to the AC power module receptacle. Power is routed through the line fuse and line voltage selection switch of the power module to the power transformer. The power transformer has a total of four secondary windings for the various supplies.

AC voltage for the display filaments is taken from a power transformer secondary at F1 and F2, and then routed to the display board.

Each DC supply uses a rectifier and a capacitive filter, and many supplies use an IC regulator. Table 4-1 summarizes rectifier, filter, and regulator circuits for the various DC supplies.

Table 4-1
Power supply components

Supply	Rectifier	Filter	Regulator
+5VD	CR104	C281, C156, C175, C273, C274	U144
+37V	CR116, CR117	C104	U101
+15.7V	CR102, CR115	C148	U125
-15.7V	CR102, CR115	C131	U119
+5V, +5VRL, +5V2	CR103	C146	U124
+18V	CR102	C148	-
-18V	CR102	C131	-

Display board

Display board components are shown in the digital circuitry block diagram in Figure 4-2.

Figure 4-2
Digital circuitry block diagram

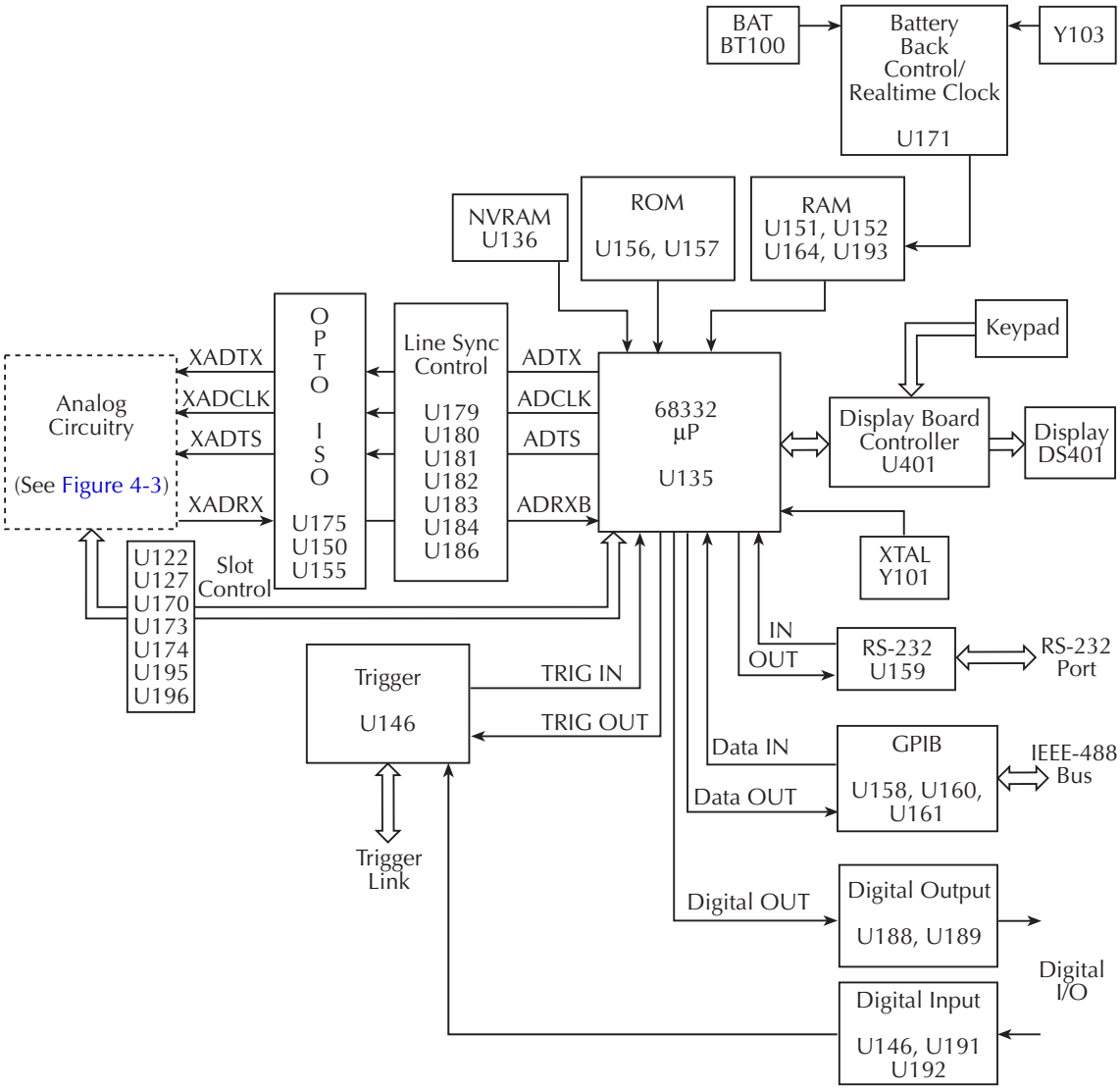

Microcontroller

U401 is the display board microcontroller that controls the display and interprets key data. The microcontroller uses three internal peripheral I/O ports for the various control and read functions.

Display data is serially transmitted to the microcontroller from the digital section via the TXB line to the microcontroller RDI terminal. In a similar manner, key data is serially sent back to the digital section through the RXB line via TDO. The 4MHz clock for the microcontroller is generated by crystal Y401.

Display

DS401 is the display module, which can display up to 12 alphanumeric characters and includes the various annunciators and five LED annunciators.

The display uses a common multiplexing scheme with each character refreshed in sequence. U402 and U403 are the drivers for the display characters and annunciators. Note that data for the drivers are serially transmitted from the microcontroller (MOSI and PC1).

Filament voltage for the display is derived from the power supply transformer (F1 and F2). The display drivers require +37VDC and +5VDC, which are supplied by U144 (+5VD) and U101 (+37V).

Key matrix

The front panel keys (S401-S430) are organized into a row-column matrix to minimize the number of microcontroller peripheral lines required to read the keyboard. A key is read by strobing the columns and reading all rows for each strobed column. Key-down data is interpreted by the display microcontroller and sent back to the main microprocessor using proprietary encoding schemes.

Digital circuitry

Refer to Figure 4-2 for the following discussion on digital circuitry.

Microprocessor

U135 is a 68332 microprocessor that oversees all operating aspects of the instrument. The MPU has a 16-bit data bus and provides a 21-bit address bus. It also has parallel and serial ports for controlling various circuits. For example, the RXD and TXD lines are used for the RS-232 interface.

The MPU clock frequency of 19.92MHz is controlled by crystal Y101. MPU RESET is performed momentarily on power-up.

Memory circuits

ROMs U156 and U157 store the firmware code for instrument operation. U157 stores the D0-D7 bits of each data word, and U156 stores the D8-D15 bits. RAMs U151, U152, U164, and U193 provide battery backed operating storage.

Semi-permanent storage facilities include NVRAM U136. This IC stores such information as instrument setup and calibration constants. Data transmission from this device is done in a serial fashion.

U194, U171, Y103, and BT100 make up the battery watchdog control, along with the real-time clock. U171 automatically senses when the +5VD supply is being powered down and then switches to BT100 for power.

RS-232 interface

Serial data transmission and reception is performed by the TXD and RXD lines of the MPU. U159 provides the necessary voltage level conversion for the RS-232 interface port.

IEEE-488 interface

U158, U160, and U161 make up the IEEE-488 interface. U158, a 9914A GPIA, takes care of routine bus overhead such as handshaking, while U160 and U161 provide the necessary buffering and drive capabilities.

Trigger circuits

Buffering for Trigger Link input and output is performed by U146. Trigger input and output is controlled by the TP5 and PC2 lines of the MPU.

Digital I/O

U146, U191, and U192 make up the digital input circuitry. External triggering can occur on J1006 or J1007. U192 allows hardware handshaking to external controllers by gating off triggers.

U188 and U189 provide digital output. The two driver ICs, U188 and U189, provide current sink capability of 250mA each.

Module slot control

U122, U127, U170, U173, U174, U195, and U196 make up the control circuitry that allows communication of relay data to Slot 1, Slot 2, Slot 3, Slot 4, or Slot 5.

Line sync

U179, U180, U181, U182, U183, U184, and U186 are used to control A/D triggers synchronized at the zero cross point of the power line voltage. U186 controls zero crossing detection, while U182 and U183 preserve the trigger states until the zero crossing threshold is detected.

Analog circuitry

Refer to Figure 4-3 for the following discussion on analog circuitry.

Figure 4-3
Analog circuitry block diagram

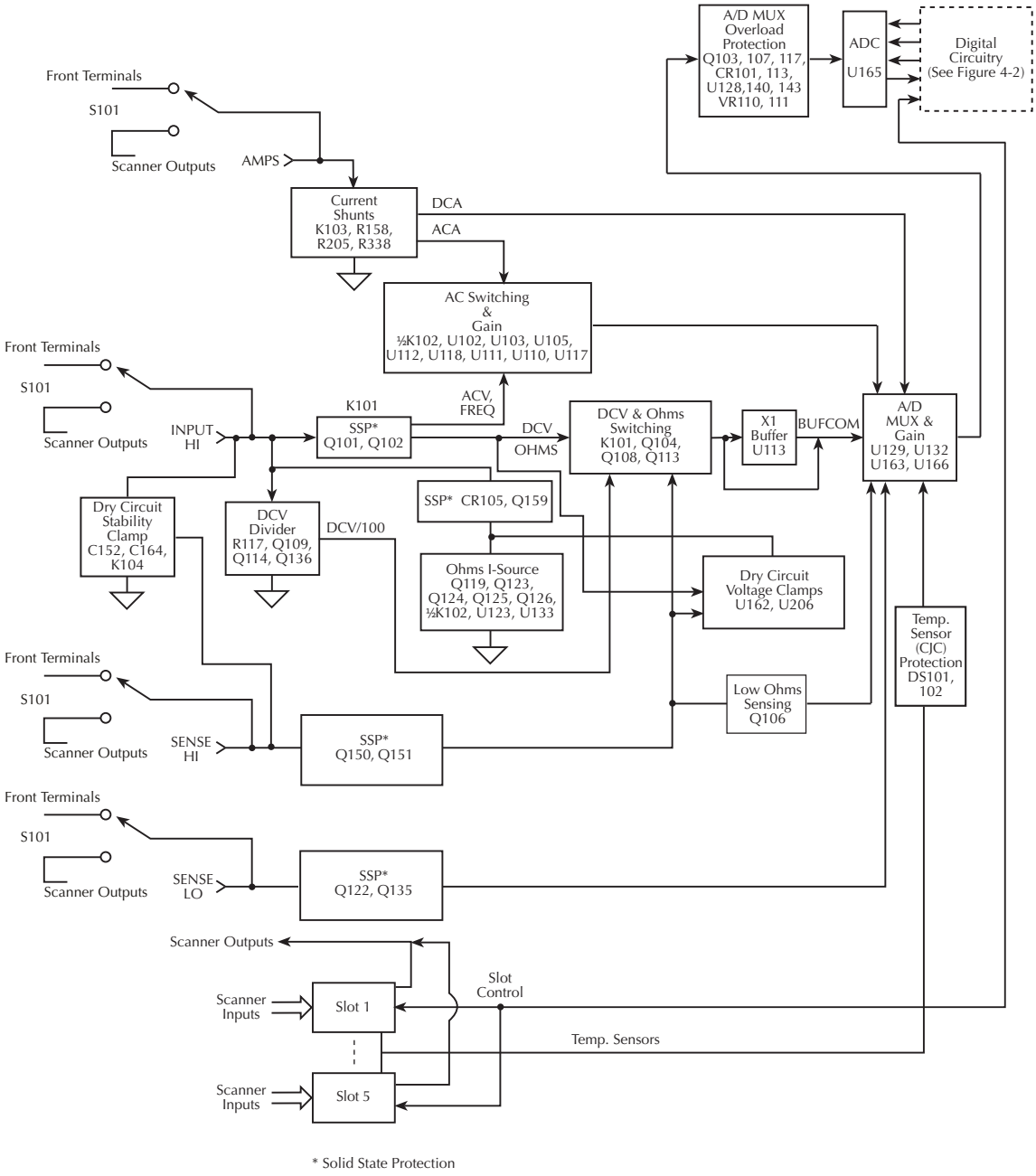

* Solid State Protection

INPUT HI

INPUT HI protection is provided by the SSP (Solid State Protection) circuit. The SSP is primarily made up of Q101 and Q102. An overload condition opens Q101 and Q102, which disconnects the analog input signal from the rest of the analog circuit.

Note that for the 100VDC and 1000VDC ranges, Q101 and Q102 of the SSP are open. The DC voltage signal is routed through the DCV Divider (Q114 and Q136 on) to the DCV switching circuit.

AMPS input

The ACA or DCA input signal is applied to the Current Shunt circuit, which is made up of K103, R158, R205, and R338. For the 20mA DC range, 5.1Ω (R205 || R338 + R158) is shunted across the input. Relay K103 is energized (set state) to select the shunts. For all other DCA ranges, and all ACA ranges, 0.1Ω (R158) is shunted across the input (K103 reset).

The ACA signal is then sent to the AC Switching & Gain circuit, while the DCA signal is routed directly to the A/D MUX & Gain circuit.

Signal switching

Signal switching for DCV and OHMS is done by the DCV & Ohms Switching circuit. FETs Q113, Q104, and Q108 connect the DCV or ohms signal to the X1 buffer (U113). For offset-compensated ohms and all dry-circuit ohms measurements, the signal is routed directly to the A/D mux by Q106, bypassing U113.

Note that the reference current for OHMS is generated by the Ohms I-Source circuit. For 4-wire ohms measurements, SENSE LO is connected to U163.

Signal switching and gain for ACV, FREQ and ACA is done by the AC Switching & Gain circuit, which is primarily made up of K102, U102, U103, U105, U112, U118, U111, U110, and U117. Note that U111 is used for frequency adjustment. The states of these analog switches vary from unit to unit.

Multiplexer and A/D converter

All input signals, except FREQ, are routed to the A/D MUX & Gain circuit. The multiplexer (U163) switches the various signals for measurement. In addition to the input signal, the multiplexer also switches among reference and zero signals at various phases of the measurement cycle.

When the input signal is selected by the MUX, it is amplified by U132 and U166. Gain is controlled by switches in U129 and associated resistors.

The multiplexed signals of the measurement cycle are routed to the A/D Converter (U165) where it converts the analog signals to digital form. The digital signals are then routed through an opto-isolator to the MPU to calculate a reading.

The multiplexer amplifier has an overload protection circuit. The circuit reduces the multiplexer gain to unity during overload conditions. This circuit is made up of primarily CR101, CR113, Q103, Q107, Q117, U128, U140, U143, VR110, and VR111.

Scanner card signals

Scanner card input signals are connected directly to installed scanner cards. Scanner card output signals are routed internally to the INPUTS switch, which selects between the front panel terminals and the scanner card outputs.

The Model 7700, 7706, and 7708 modules contain CJC (voltage) temperature sensors. These sensors are multiplexed into U163 at various phases of the measurement cycle.

Dry circuit ohms

Figure 4-4 shows a simplified schematic of the dry circuit ohms circuitry. Dry circuit ohms measurements are made similar to those for conventional ohms in that a 10µA to 10mA current source (depending on ohms range) forces a current through the DUT resistance, and the voltage across the device is measured. In the case of dry circuit ohms, however, there are two clamps that act to limit the voltage across the DUT to 20mV. Normally the voltage is sensed across the SENSE HI and LO terminals, and the main clamp restricts the DUT voltage to 20mV. A secondary clamp monitors the voltage across INPUT HI and LO and acts to restrict the voltage to 50mV if the SENSE terminals are not connected to the DUT. When either clamp acts to limit the voltage across the DUT, the current source goes into compliance, effectively turning the current source into a voltage source thus limiting the DUT voltage to 20mV or 50mV as the case may be. Note that a 0.8µF capacitor and 100k¾ resistor are connected across the DUT during dry circuit ohms measurements for stabilization.

Figure 4-4
Simplified schematic of dry circuit ohms

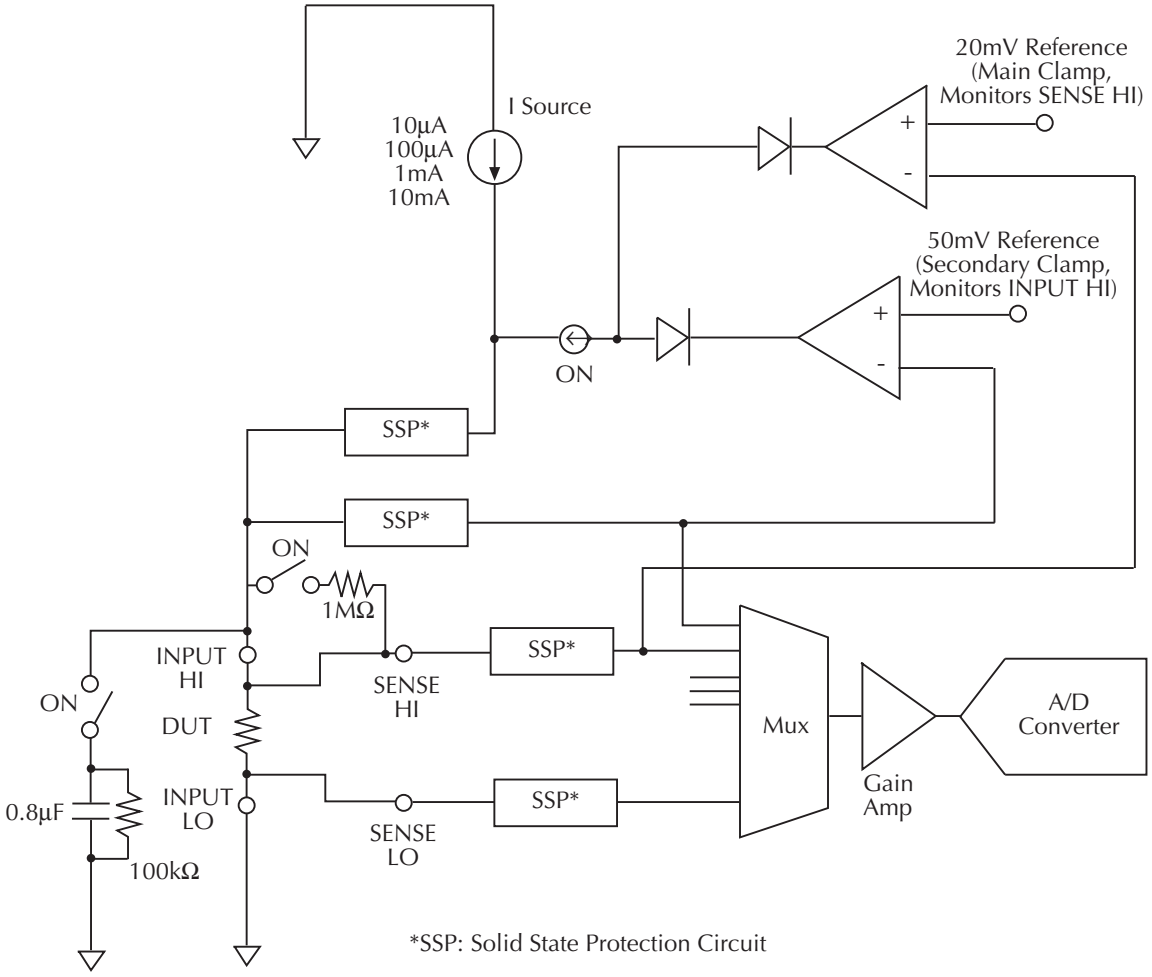

Troubleshooting

Troubleshooting information for the various circuits is summarized below. See "Principles of operation" for circuit theory.

Display board checks

If the front panel DISP test indicates that there is a problem on the display board, use Table 4-2.

Table 4-2
Display board checks

Step	Item/Component	Required Condition	Remarks
1	Front panel DISP test	Verify that all segments operate.	Use front panel display test.
2	P1005, PIN 5	+5V ±5%	Digital +5V supply.
3	P1005, PIN 9	+37V ±5%	Display +37V supply.
4	U401, PIN 1	Goes low briefly on power up, then goes high.	Microcontroller RESET.
5	U401, PIN43	4MHz square wave.	Controller 4MHz clock.
6	U401, PIN 32	Pulse train every 1msec.	Control from main processor.
7	U401, PIN 33	Brief pulse train when front panel key is pressed.	Key down data sent to main processor.

Power supply checks

Power supply problems can be checked using Table 4-3.

Table 4-3
Power supply checks

Step	Item/Component	Required Condition	Remarks
1	Line fuse	Check continuity.	Remove to check.
2	Line voltage	120V/240V as required.	Check power module position.
3	Line power	Plugged into live receptacle, power on.	Check for correct power-up sequence.
4	U144, pin 3	+5V ±5%	+5VD, referenced to Common D[1].
5	U101, pin 7	+37V ±5%	+37V, referenced to Common D[1].
6	U125, pin 3	+15.7V ±5%	+15V, referenced to Common A[2].
7	U119, pin 3	-15.7V ±5%	-15V, referenced to Common A[2].
8	U124, pin 3	+5V ±5%	+5VRL, referenced to Common A[2].

[1]TP106
[2]TP102

Digital circuitry checks

Digital circuit problems can be checked using Table 4-4.

Table 4-4
Digital circuitry checks

Step	Item/Component	Required Condition	Remarks
1	Power-on test	RAM OK, ROM OK.	Verify that RAM and ROM are functional.
2	U152, pin 16	Digital common.	All signals referenced to digital common.
3	U171, pin 16	+5V (+5VD supply).	Digital logic supply.
4	U194, pin 1	+5V (+5VB supply).	Battery backed memory supply.
5	U171, pin 4	+3V	Battery voltage (BT100).
6	U135, pin 68	Low on power-up, then goes high.	MPU RESET line.
7	U135, lines A0-A20	Check for stuck bits.	MPU address bus.
8	U135, lines D0-D15	Check for stuck bits.	MPU data bus.
9	U135, pin 60	32.758kHz	MPU clock.
10	U159, pin 13	Pulse train during RS-232 I/O.	RS-232 RX line.
11	U159, pin 14	Pulse train during RS-232 I/O.	RS-232 TX line.
12	U158, pins 34-42	Pulse train during IEEE-488 I/O.	IEEE-488 data bus.
13	U158, pins 26-31	Pulses during IEEE-488 I/O.	IEEE-488 command lines.
14	U158, pin 24	Low with remote enabled.	IEEE-488 REN line.
15	U158, pin 25	Low during interface clear.	IEEE-488 IFC line.
16	U135, pin 48	Pulse train.	ADRXB
17	U135, pin 76	Pulse train.	ADTX
18	U135, pin 77	Pulse train.	ADCLK
19	U135, pin 74	Pulse train.	ADTS

Analog signal switching states

Table 4-5 through Table 4-13 provide switching states of the various relays, FETs, and analog switches for the basic measurement functions and ranges. These tables can be used to assist in tracing an analog signal from the input to the A/D multiplexer.

Table 4-5
DCV signal switching

Range	Q101	Q102	Q151	Q150	Q114	Q136	Q109
100mV	ON	ON	OFF	OFF	OFF	OFF	OFF
1V	ON	ON	OFF	OFF	OFF	OFF	OFF
10V	ON	ON	OFF	OFF	OFF	OFF	OFF
100V	OFF	OFF	OFF	OFF	ON	ON	OFF
1000V	OFF	OFF	OFF	OFF	ON	ON	OFF

Range	K101*	Q113	Q104	Q108	Q106	Q148
100mV	SET	OFF	ON	OFF	OFF	ON
1V	SET	OFF	ON	OFF	OFF	ON
10V	SET	OFF	ON	OFF	OFF	ON
100V	SET	OFF	OFF	ON	OFF	ON
1000V	SET	OFF	OFF	ON	OFF	ON

*K101 set states: Pin 8 switched to Pin 7
Pin 3 switched to Pin 4
K101 reset states: Pin 8 switched to Pin 9
Pin 3 switched to Pin 2

Table 4-6
ACV and FREQ signal switching

Range	Q101	Q102	K101*	K102*	U103 Pin 8	U103 Pin 9
100mV	ON	ON	RESET	RESET	ON	ON
1V	ON	ON	RESET	RESET	ON	ON
10V	ON	ON	RESET	SET	OFF	OFF
100V	ON	ON	RESET	SET	OFF	OFF
750V	ON	ON	RESET	SET	OFF	OFF
Range	**U105 Pin 9**	**U105 Pin 8**	**U103 Pin 16**	**U103 Pin 1**	**U105 Pin 1**	**U111 Pin 16**
100mV	OFF	OFF	OFF	ON	ON	OFF
1V	OFF	OFF	ON	OFF	OFF	OFF
10V	ON	OFF	OFF	ON	ON	OFF
100V	ON	OFF	ON	OFF	OFF	OFF
750V	ON	ON	OFF	OFF	OFF	OFF

*K101 and K102 reset states: Pin 8 switched to Pin 9
Pin 3 switched to Pin 2
K101 and K102 set states: Pin 8 switched to Pin 7
Pin 3 switched to Pin 4

Table 4-7
Ω2 signal switching

Range	Q101	Q102	Q151	Q150	Q122	Q135	Q114	Q136
10Ω	ON	ON	OFF	OFF	OFF	OFF	OFF	OFF
100Ω	ON	ON	OFF	OFF	OFF	OFF	OFF	OFF
1kΩ	ON	ON	OFF	OFF	OFF	OFF	OFF	OFF
10kΩ	ON	ON	OFF	OFF	OFF	OFF	OFF	OFF
100kΩ	ON	ON	OFF	OFF	OFF	OFF	OFF	OFF
1MΩ	ON	ON	OFF	OFF	OFF	OFF	OFF	OFF
10MΩ	ON	ON	OFF	OFF	OFF	OFF	OFF	OFF
100MΩ	ON	ON	OFF	OFF	OFF	OFF	OFF	OFF
Range	**Q109**	**K101***	**K102***	**Q113**	**Q104**	**Q108**	**Q106**	**Q148**
10Ω	OFF	SET	RESET	OFF	ON	OFF	OFF	ON
100Ω	OFF	SET	RESET	OFF	ON	OFF	OFF	ON
1kΩ	OFF	SET	RESET	OFF	ON	OFF	OFF	ON
10kΩ	OFF	SET	RESET	OFF	ON	OFF	OFF	ON
100kΩ	OFF	SET	RESET	OFF	ON	OFF	OFF	ON
1MΩ	OFF	SET	RESET	OFF	ON	OFF	OFF	ON
10MΩ	ON	SET	RESET	OFF	ON	OFF	OFF	ON
100MΩ	ON	SET	RESET	OFF	ON	OFF	OFF	ON

*K101 set states: Pin 8 switched to Pin 7
Pin 3 switched to Pin 4
K102 reset states: Pin 8 switched to Pin 9
Pin 3 switched to Pin 2

Table 4-8
Ω4 signal switching

Range	Q101	Q102	Q151	Q150	Q122	Q135	Q114	Q136
1Ω	OFF	OFF	ON	ON	ON	ON	OFF	OFF
10Ω	OFF	OFF	ON	ON	ON	ON	OFF	OFF
100Ω	OFF	OFF	ON	ON	ON	ON	OFF	OFF
1kΩ	OFF	OFF	ON	ON	ON	ON	OFF	OFF
10kΩ	OFF	OFF	ON	ON	ON	ON	OFF	OFF
100kΩ	OFF	OFF	ON	ON	ON	ON	OFF	OFF
1MΩ	OFF	OFF	ON	ON	ON	ON	OFF	OFF
10MΩ	ON	ON	OFF	OFF	ON	ON	OFF	OFF
100MΩ	ON	ON	OFF	OFF	ON	ON	OFF	OFF
Range	**Q109**	**K101***	**K102***	**Q113**	**Q104**	**Q108**	**Q106**	**Q148**
1Ω	OFF	SET	RESET	ON	OFF	OFF	OFF	ON
10Ω	OFF	SET	RESET	ON	OFF	OFF	OFF	ON
100Ω	OFF	SET	RESET	ON	OFF	OFF	OFF	ON
1kΩ	OFF	SET	RESET	ON	OFF	OFF	OFF	ON
10kΩ	OFF	SET	RESET	ON	OFF	OFF	OFF	ON
100kΩ	OFF	SET	RESET	ON	OFF	OFF	OFF	ON
1MΩ	OFF	SET	RESET	ON	OFF	OFF	OFF	ON
10MΩ	ON	SET	RESET	OFF	ON	OFF	OFF	ON
100MΩ	ON	SET	RESET	OFF	ON	OFF	OFF	ON

*K101 set states: Pin 8 switched to Pin 7
Pin 3 switched to Pin 4
K102 reset states: Pin 8 switched to Pin 9
Pin 3 switched to Pin 2

Table 4-9
Ω4 dry circuit signal switching

Range	Q101	Q102	Q151	Q150	Q122	Q135	Q114	Q136
1Ω	ON	ON	ON	ON	ON	ON	OFF	OFF
10Ω	ON	ON	ON	ON	ON	ON	OFF	OFF
100Ω	ON	ON	ON	ON	ON	ON	OFF	OFF
1kΩ	ON	ON	ON	ON	ON	ON	OFF	OFF
Range	Q109	K101*	K102*	Q113	Q104	Q108	Q106	Q148
1Ω	OFF	SET	RESET	ON	OFF	OFF	ON	OFF
10Ω	OFF	SET	RESET	ON	OFF	OFF	ON	OFF
100Ω	OFF	SET	RESET	ON	OFF	OFF	ON	OFF
1kΩ	OFF	SET	RESET	ON	OFF	OFF	ON	OFF

*K101 set states: Pin 8 switched to Pin 7
Pin 3 switched to Pin 4
K102 reset states: Pin 8 switched to Pin 9
Pin 3 switched to Pin 2

Table 4-10
Ω2/Ω4 reference signal switching

Range	Q159	Q158	Q157	U133/0.7V	U133/7V
1Ω*	ON	ON	OFF	OFF	ON
10Ω	ON	ON	OFF	OFF	ON
100Ω	ON	ON	OFF	ON	OFF
1kΩ	ON	ON	OFF	ON	OFF
10kΩ	ON	ON	OFF	OFF	ON
100kΩ	ON	ON	OFF	ON	OFF
1MΩ	ON	ON	OFF	ON	OFF
10MΩ	OFF	OFF	OFF	OFF	ON
100MΩ	OFF	OFF	OFF	OFF	ON
Range	Q123	Q125	Q124	Q126	
1Ω*	ON	ON	OFF	OFF	
10Ω	ON	ON	OFF	OFF	
100Ω	ON	ON	OFF	OFF	
1kΩ	ON	ON	OFF	OFF	
10kΩ	OFF	OFF	ON	ON	
100kΩ	OFF	OFF	ON	ON	
1MΩ	OFF	OFF	ON	ON	
10MΩ	OFF	OFF	ON	ON	
100MΩ	OFF	OFF	ON	ON	

*Ω4 only

Table 4-11
Ω4 dry circuit reference signal switching

Range	Q159	Q158	Q157	U133/0.7V	U133/7V	Q123	Q125
1Ω	ON	ON	ON	OFF	ON	ON	ON
10Ω	ON	ON	ON	ON	OFF	ON	ON
100Ω	ON	ON	ON	OFF	ON	OFF	OFF
1kΩ	ON	ON	ON	ON	OFF	OFF	OFF
Range	**Q124**	**Q126**	**K104***	**U133/9**	**Q171**	**U208/9**	**U208/16**
1Ω	OFF	OFF	SET	ON	ON	ON	ON
10Ω	OFF	OFF	SET	ON	ON	ON	ON
100Ω	ON	ON	SET	ON	ON	ON	ON
1kΩ	ON	ON	SET	ON	ON	ON	ON

*K104 set states: Pin 8 switched to Pin 7
Pin 3 switched to Pin 4

Table 4-12
DCA signal switching

Range	K103
20mA	Set
100mA	Reset
1A	Reset
3A	Reset

K103 set states: Pin 8 to 7
Pin 3 to 4
K103 reset states: Pin 8 to 9
Pin 3 to 2

Table 4-13
ACA signal switching

Range	K103	U105 Pin 16	U105 Pin 1	U111 Pin 16	U105 Pin 8	U103 Pin 16	U103 Pin 1
1A	Reset	ON	ON	OFF	OFF	OFF	OFF
3A	Reset	ON	ON	ON	OFF	OFF	OFF

K103 set states: Pin 8 to 7
Pin 3 to 4
K103 reset states: Pin 8 to 9
Pin 3 to 2

Table 4-14 through Table 4-19 can be used to trace the analog signal through the A/D multiplexer (U163) to the final amplifier stage. These tables show the MUX lines (S3, S4, S6, S7) that are selected for measurement during the SIGNAL phase of the multiplexing cycle. Also included are switching states of analog switches (U129) that set up the gain for the final amplifier stage (U166).

Table 4-14
DCV signal multiplexing and gain

Range	Signal (U163)	U129 Pin 1	U129 Pin 8	U129 Pin 9	Gain (U166)
100mV	S4	OFF	OFF	ON	×100
1V	S4	OFF	ON	OFF	×10
10V	S4	ON	OFF	OFF	×1
100V	S4	OFF	ON	OFF	×10
1000V	S4	ON	OFF	OFF	×1

Table 4-15
ACV and ACA signal multiplexing and gain

Range	Signal (U163)	U129 Pin 1	U129 Pin 8	U129 Pin 9	Gain (U166)
All	S3	ON	OFF	OFF	×1

Table 4-16
DCA signal multiplexing and gain

Range	Signal (U163)	U129 Pin 1	U129 Pin 8	U129 Pin 9	Gain (U166)
20mA	S6	OFF	OFF	ON	×100
100mA	S6	OFF	OFF	ON	×100
1A	S6	OFF	OFF	ON	×100
3A	S6	OFF	ON	OFF	×10

Table 4-17
Ω2 signal multiplexing and gain

Range	Signal (U163)	U129 Pin 1	U129 Pin 8	U129 Pin 9	Gain (U166)
10Ω	S4	OFF	OFF	ON	×100
100Ω	S4	OFF	OFF	ON	×100
1kΩ	S4	OFF	ON	OFF	×10
10kΩ	S4	OFF	ON	OFF	×10
100kΩ	S4	OFF	ON	OFF	×10
1MΩ	S4	ON	OFF	OFF	×1
10MΩ	S4	ON	OFF	OFF	×1
100MΩ	S4	ON	OFF	OFF	×1

Table 4-18
Ω4 signal multiplexing and gain

Range	Signal (U163)	U129 Pin 1	U129 Pin 8	U129 Pin 9	Gain (U166)
1Ω	S4 then S7	OFF	OFF	ON	×100
10Ω	S4 then S7	OFF	OFF	ON	×100
100Ω	S4 then S7	OFF	OFF	ON	×100
1kΩ	S4 then S7	OFF	ON	OFF	×10
10kΩ	S4 then S7	OFF	ON	OFF	×10
100kΩ	S4 then S7	OFF	ON	OFF	×10
1MΩ	S4 then S7	ON	OFF	OFF	×1
10MΩ	S4 then S7	ON	OFF	OFF	×1
100MΩ	S4 then S7	ON	OFF	OFF	×1

Table 4-19
Ω4 dry circuit signal multiplexing and gain

Range	Signal (U163)	U129 Pin 1	U129 Pin 8	U129 Pin 9	Gain (U166)
1Ω	S4 then S7	OFF	OFF	ON	×100
10Ω	S4 then S7	OFF	OFF	ON	×100
100Ω	S4 then S7	OFF	OFF	ON	×100
1kΩ	S4 then S7	OFF	OFF	ON	×100

Figure 4-2 provides a block diagram of the analog circuitry. Table 4-20 shows where the various switching devices are located in the block diagram.

Table 4-20
Switching device locations

Switching Devices	Analog Circuit Section (Figure 4-3)
Q101, Q102	SSP (Solid State Protection) HI
Q151, Q150	SSP Sense HI
Q122, Q135	SSP Sense LO
Q159	SSP I-Source
Q114, Q136, Q109	DCV Divider
K101, Q113, Q104, Q108	DCV and Ohms Switching
Q106, Q148	Front End Bypass
K102, U103, U105, U111	AC switching and Gain
U133, Q123, Q124, Q125, Q126, Q158	Ohms I-Source
K103	Current Shunts
U129, U163	A/D Mux and Gain
Q157, U208, K104, Q171	Dry circuit clamp

No comm link error

A “No Comm Link” error indicates that the front panel processor has ceased communication with the main processor which is located on the motherboard. This error indicates that there may be a problem with the cable connection from the front panel display or one of the main processor ROMs may require reseating in its socket. Check to be sure there is a proper cable connection from the front panel display. ROMs may be reseated as follows:

1. Turn off the power and disconnect the line cord and all other test leads and cables from the instrument.
2. Remove the case cover as outlined in Section 5.
3. Find the two firmware ROMs, U156 and U157, located on the motherboard. These are the only ICs installed in sockets. (Refer to the component layout drawing at the end of Section 6 for exact locations.)

CAUTION Be careful not to push down excessively or you might crack the mother board.

4. Carefully push down on each ROM IC to make sure it is properly seated in its socket.
5. Connect the line cord, and turn on the power. If the problem persists, additional troubleshooting will be required.

5
Disassembly

Introduction

This section explains how to handle, clean, and disassemble the Model 2750. Disassembly drawings are located at the end of this section.

Handling and cleaning

To avoid contaminating PC board traces with body oil or other foreign matter, avoid touching the PC board traces while you are repairing the instrument. Some circuit board areas, especially those under the motherboard shield, have high-impedance devices or sensitive circuitry where contamination could cause degraded performance.

Handling PC boards

Observe the following precautions when handling PC boards:

- Wear cotton gloves.
- Only handle PC boards by the edges and shields.
- Do not touch any board traces or components not associated with repair.
- Do not touch areas adjacent to electrical contacts.
- Use dry nitrogen gas to clean dust off PC boards.

Solder repairs

Observe the following precautions when soldering a circuit board:

- Use an OA-based (organic activated) flux, and take care not to spread the flux to other areas of the circuit board.
- Remove the flux from the work area when you have finished the repair by using pure water with clean, foam-tipped swabs or a clean, soft brush.
- Once you have removed the flux, swab only the repair area with methanol, then blow dry the board with dry nitrogen gas.
- After cleaning, allow the board to dry in a 50°C, low-humidity environment for several hours.

Static sensitive devices

CMOS devices operate at very high impedance levels. Therefore, any static that builds up on you or your clothing may be sufficient to destroy these devices if they are not handled properly. Use the following precautions to avoid damaging them:

CAUTION Many CMOS devices are installed in the Model 2750. Handle all semiconductor devices as being static sensitive.

- Transport and handle ICs only in containers specially designed to prevent static build-up. Typically, you will receive these parts in anti-static containers made of plastic or foam. Keep these devices in their original containers until ready for installation.
- Remove the devices from their protective containers only at a properly grounded work station. Also, ground yourself with a suitable wrist strap.
- Handle the devices only by the body; do not touch the pins.
- Ground any printed circuit board into which a semiconductor device is to be inserted to the bench or table.
- Use only anti-static type desoldering tools.
- Use only grounded-tip soldering irons.
- Once the device is installed in the PC board, it is normally adequately protected and you can handle the boards normally.

Assembly drawings

Use the following assembly drawings to assist you as you disassemble and reassemble the Model 2750. Refer to these drawings for information about the Keithley part numbers of most mechanical parts in the unit. The drawings are located at the end of this section of the manual.

- Front Panel Assembly — 2750-040.
- Card Cage/Power Module Assembly — 2750-050.
- Power Module/Transformer/Chassis Assembly — 2750-051.
- Front Panel/Card Cage/Chassis Assembly — 2750-052.
- Chassis Assembly — 2750-053, 2750-054.
- Final Inspection — 2750-080.

Disassembly procedures

Case cover removal

Follow the steps below to remove the case cover to gain access to internal parts.

WARNING Before removing the case cover, disconnect the line cord and any test leads from the instrument.

1. Remove Screws — Remove the four screws (two on each side) that secure the case to the chassis.
2. Remove Cover — To remove the case, grasp the case at the sides, and carefully slide the cover back about an inch, then lift the case cover off the chassis.

Motherboard removal

Perform the following steps to remove the motherboard. This procedure assumes that the case cover is already removed.

1. Remove the IEEE-488, RS-232, and Digital I/O fasteners.
2. The IEEE-488, RS-232, and Digital I/O connectors each have two nuts that secure the connectors to the rear panel. Remove these nuts.
3. Remove the front/rear switch rod.
4. At the switch, place the edge of a flat-blade screwdriver in the notch on the push-rod. Gently twist the screwdriver while pulling the rod from the shaft.
5. Unplug cables:
   - Unplug the display board ribbon cable from connector J1014.
   - Unplug the transformer cables from connectors J1002 and J1003.
   - Unplug scanner slots ribbon cables from connectors J1012 and J1016.
   - Unplug analog backplane connections J1008 and J1010.
   - Unplug front panel input terminals connector from J1017.
6. Remove the fastening screws (five total) that secure the motherboard to the chassis. Most screws are around the periphery of the board (one of these screws secures U144), while two are located away from the edges of the board.
7. During reassembly, replace the board, and start the IEEE-488, RS-232, and Digital I/O connector nuts and the mounting screw. Tighten all the fasteners once they are all in place and the board is correctly aligned.
8. Remove the motherboard by sliding it forward until the connectors clear the rear panel, then carefully pull the motherboard from the chassis.

Card cage removal

After the motherboard has been removed, the 2-slot card cage underneath that holds plug-in modules can be removed simply by removing the three screws (two top, one bottom) that attach the card cage to the case bottom. The 3-slot card cage can be removed in a similar manner by removing the three screws (two top, one bottom) that secure it to the chassis, although it is not necessary to remove the motherboard to do so.

Front panel disassembly

Use the following procedures to remove the display board and/or the pushbutton switch pad:

NOTE *You must first remove the case cover and the front/rear input switch rod, and disconnect the front input terminal wires as described earlier in this section.*

1. Unplug the display board ribbon cable from connector J1014 if you have not already done so.
2. Remove the front panel assembly.
3. Remove the four screws (two on each side) and two internal kep nuts that secure the front panel to the chassis, then pull the front panel assembly forward until it separates from the chassis.
4. Remove the four screws that secure the display board to the front panel. Pull the display board from the front panel.
5. Remove the switch pad by pulling it from the front panel.

Removing power components

The following procedures to remove the power transformer and/or power module require that the case cover be removed as previously explained.

Power transformer removal

Perform the following steps to remove the power transformer:

1. Disconnect the two power cables connected to the motherboard and the wires going to the rear panel power module.
2. Remove the two nuts that secure the transformer to the bottom of the chassis.
3. Pull the black ground wire off the threaded stud, and remove the power transformer from the chassis.

Power module removal

Perform the following steps to remove the power module:

1. Disconnect the wires going to the power transformer.
2. Remove the POWER switch rod.
3. Disconnect the power module's ground wire. This green and yellow wire connects to a threaded stud on the chassis with a kep nut.
4. Squeeze the latches on either side of the power module while pushing the module from the access hole.

Instrument reassembly

Reassemble the instrument by reversing the previous disassembly procedures. Make sure that all parts are properly seated and secured and that all connections are properly made.

WARNING To ensure continued protection against electrical shock, verify that power line ground (green and yellow wire attached to the power module) and the power transformer ground (black wire) are connected to the chassis. When installing the power transformer, be sure to reconnect the black ground wire to the mounting stud on the bottom of the chassis. Be sure to install all four case screws to assure a good case-to-chassis ground connection.

Input terminal wire connections

Although it is not necessary to disconnect the input terminal wires, use the information in Table 5-1 to connect input terminal wires should you choose to do so.

Table 5-1
Input terminal wire colors

Input Terminal	Wire Color
INPUT HI	Red
INPUT LO	Black
SENSE HI	Yellow
SENSE LO	Gray
AMPS and AMPS fuse	White

Power module wire connections

Use the information in Table 5-2 and DETAIL B of drawing 2750-050 to connect power module wires.

Table 5-2
Power module wire colors

Location	Wire Color
Top wire	Gray
Right top	Violet
Left top	Red
Right bottom	White
Left bottom	Blue

6
Replaceable Parts

Introduction

This section contains replacement parts information and component layout drawings for the Model 2750 and the Model 7700 module. For additional information about the Model 7700 module, refer to the modules manual.

Parts lists

Both electrical and mechanical parts for the Model 2750 are listed in several tables on the following pages. For additional information on mechanical parts, see the assembly drawings provided at the end of Section 5.

Ordering information

To place an order, or to obtain information concerning replacement parts, contact your Keithley representative or the factory (see inside front cover for addresses). When ordering parts, be sure to include the following information:

- Instrument model number (Model 2750).
- Instrument serial number.
- Part description.
- Component designation (if applicable).
- Keithley part number.

Factory service

If the instrument is to be returned to Keithley Instruments for repair, perform the following:

- Call the Repair Department at 1-888-KEITHLEY for a Return Material Authorization (RMA) number.
- Complete the service form at the back of this manual, and include it with the instrument.
- Carefully pack the instrument in the original packing carton.
- Write ATTENTION REPAIR DEPARTMENT and the RMA number on the shipping label.

Component layouts

Component layouts for the various circuit boards are provided on the following pages.

Table 6-1
Model 2750 motherboard parts list

Circuit Designation	Description	Keithley Part No.
BT100	L1 BATTERY, 3.6V, 950MAH	BA-51
C100,C129,C130,C141,C158,C176, C200,C219	CAP, 47P, 5%, 100V, CERAMIC	C-465-47P
C102,C101	CAP, .01UF, 10%, 1000V, CERAMIC	C-64-.01
C103,C107,C111,C128,C151,C166, C290,C295	CAP, .1UF, 20%, 50V, CERAMIC	C-418-.1
C104	CAP, 100UF, 20%, 63V, ALUM ELEC	C-403-100
C105	CAP, .22UF, 20%, 400V, FILM	C-513-.22
C106	CAP, 15P, 1%, 100V, CERAMIC	C-512-15P
C108	CAP, .068U, 10%, 100V, CERAMIC	C-389-.068
C109	CAP, 2.2UF, 20%, 63V, POLYCARB	C-480-2.2
C110,C181,C226,C254,C277,C192	CAP, 47P, 5%, 100V, CERAMIC	C-465-47P
C112,C248	CAP, .01, 5%, 50V, NPO	C-514-.01
C113,C114,C119,C126,C247	CAP, 1000P, 10%, 100V, CERAMIC	C-451-1000P
C115	CAP, .33UF, 20%, 63V, POLYCARBONATE	C-482-.33
C116-C118,C122,C124,C125, C127,C133,C135	CAP, .1UF, 20%, 50V, CERAMIC	C-418-.1
C120	CAP, 270PF, 5%, 100V, CERAMIC	C-465-270P
C123,C241,C245	CAP, 1000P, 10%, 100V, CERAMIC	C-451-1000P
C131,C148	CAP, 1000U, 20%, 35V, ALUM ELEC	C-595-1000
C132	CAP, 220PF, 10%, 100V, CERAMIC	C-451-220P
C134,C140,C224,C235,C251,C287, C121	CAP, 47PF, 10%, 100V, CERAMIC	C-451-47P
C136,C138,C139,C142,C144,C147, C153-C155	CAP, .1UF, 20%, 50V, CERAMIC	C-418-.1
C137	CAP, 33PF, 5%, 100V, CERAMIC	C-465-33P
C143	CAP, 100P, 10%, 100V, CERAMIC	C-451-100P
C145,C240	CAP, 1000PF, 20%, 50V, CERAMIC	C-418-1000P
C146	CAP, 1000UF, +/-20%, 16V, ALUMINUM	C-488-1000
C150,C285,C288,C289	CAP, 47PF, 10%, 100V, CERAMIC	C-451-47P
C152,C164	CAP, 39U, 20%, 1000V, CERAMIC	C-616-.39
C156,C273,C274,C281	CAP, 3300U, 20%, 16V, ALUM ELEC	C-592-3300
C157	CAP, 100PF, 5%, 100V, CERAMIC	C-465-100P
C159-C163,C167-C170,C172-C174,C178,C180	CAP, .1UF, 20%, 50V, CERAMIC	C-418-.1
C165	CAP, .1UF, 20%, 50V, CERAMIC	C-418-.1

Table 6-1 (continued)
Model 2750 motherboard parts list

Circuit Designation	Description	Keithley Part No.
C171,C177	CAP, 2200P, 10%, 100V, CERAMIC	C-430-2200P
C175,C209	CAP, 22UF, 20%, 25V, TANTALUM	C-440-22
C179,C266	CAP, 100PF, 5%, 100V, CERAMIC	C-465-100P
C182-C185,C187,C190,C193, C194,C197-C199	CAP, .1UF, 20%, 50V, CERAMIC	C-418-.1
C186,C189,C191	CAP, .01UF, 20%, 50V, CERAMIC	C-418-.01
C188	CAP, 10PF, 5%, 50V, MONO CERAMIC	C-452-10P
C201-C208,C210,C212-C218, C221,C223,C225	CAP, .1UF, 20%, 50V, CERAMIC	C-418-.1
C220,C222,C255-C262,C268,C303-C311	CAP, 47P, 5%, 100V, CERAMIC	C-465-47P
C227,C229,C231-C234,C236-C239,C250,C263	CAP, .1UF, 20%, 50V, CERAMIC	C-418-.1
C230,C296	CAP, .01UF, 20%, 50V, CERAMIC	C-418-.01
C242,C243,C246,C249,C283,C284	CAP, .01UF, 10%, 50V, CERAMIC	C-491-.01
C244,C267,C272,C278	CAP, 1000PF, 20%, 50V, CERAMIC	C-418-1000P
C252	CAP, 22PF, 10%, 100V, CERAMIC	C-451-22P
C264,C265,C291,C292	CAP, 15P, 1%, 100V, CERAMIC	C-512-15P
C269-C271,C275,C276,C279, C298,C299,C149	CAP, .1UF, 20%, 50V, CERAMIC	C-418-.1
C293,C294	CAP, 47UF, +/-20%, 25V, ALUM ELEC	C-314-47
C297,C302	CAP, .1UF, 20%, 50V, CERAMIC	C-418-.1
C300,C301	CAP, 270PF, 5%, 100V, CERAMIC	C-465-270P
CR102,CR103	DIODE, BRIDGE, DF01	RF-52
CR104,CR106	DIODE, BRIDGE, PE05	RF-48
CR105	DIODE, HI-VOLTAGE, HV-15	RF-76
CR107-CR109,CR111,CR112, CR115-CR117	DIODE, DUAL SWITCHING, BAV99L	RF-82
CR110,CR118	DIODE, DUAL, HSM-2822T31	RF-95
CR119	DIODE, SWITCHING, MMBD914	RF-83
CR120,CR122,CR125	DIODE, DUAL COMMON ANODE, BAW56LT2	RF-98
CR126,CR101,CR113,CR114	DIODE, DUAL SWITCHING, BAV99L	RF-82
DS101,DS102	PILOT LIG, HSMH-T400, LED	PL-92-1
J1002	CONN, RT ANGLE HEADER	CS-1017-1
J1003	CONN, RT ANGLE HEADER, 5 PINS	CS-1017-2
J1004	CONN, RIGHT ANGLE, 24PIN	CS-507
J1005	CONN, RT ANGLE, MALE, 9 PIN	CS-761-9
J1006	CONN, MICRODIN W/GND FINGERS	CS-792
J1007	CONN, D-SUB MALE, BOARDLOCK TYPE	CS-848-9

Table 6-1 (continued)
Model 2750 motherboard parts list

Circuit Designation	Description	Keithley Part No.
J1008	LATCHING HEADER, FRICTON, SGL ROW	CS-724-3
J1010	CONN, FEMALE, 8 PIN	CS-612-8
J1012	CONN, HEADER STRAIGHT SOLDER PIN	CS-368-20
J1014	CONN, HEADER STRAIGHT SOLDER PIN	CS-368-16
J1015	CONN, HEADER STRAIGHT SOLDER PIN	CS-368-10
J1016	CONN, HEADER STRAIGHT SOLDER PIN	CS-368-26
J1017	LATCHING HEADER, FRICTION, SINGLE ROW	CS-724-12
K101,K102,K103,K104	RELAY, MINATURE (DPDT) TQ2E-L2-5V, EA2-5TNJ	RL-155
L101,L102,L103,L104,L123	FERRITE CHIP, 600 OHM, BLM32A07	CH-62
L105,L106,L118,L119,L125,L126, L501	FERRITE CHIP, 600 OHM, BLM32A07	CH-62
L107	CHOKE	CH-61
L108	DATA LINE FILTER	CH-111-1
L109	CHOKE, EMI	CH-57
L110,L111,L112,L113,L114,L116, L117,L124	CHOKE, 22UH	CH-66-22
L120,L122	CHOKE, 22UH	CH-66-22
L121	CHOKE, 100U, SM INDUCTOR	CH-66-100
LS101	BEEPER, 5V, 30MA, QMX-05	EM-6
M315,M316	WIRE ROUTING CABLE CLAMP	CC-88-1
Q101,Q102,Q159	N CHANNEL MOSFET	TG-387
Q104,Q107,Q113,Q114,Q126, Q136,Q137,Q148	TRANS, N CHANNEL JFET, SNJ132199	TG-294
Q106,Q117	TRANS, N CHANNEL JFET, SNJ132199	TG-294
Q108,Q109,Q123,Q124,Q171	TRANS, N CHANNEL JFET, SST4118	TG-347
Q110,Q112,Q115,Q118,Q149, Q160,Q164	TRANS, NPN, MMBT3904	TG-238
Q111,Q116,Q129,Q163,Q165, Q121,Q134	TRANS, PNP, MMBT3906L	TG-244
Q119	TRANS, P CHANNEL JFET, J270	TG-166-1
Q122,Q135,Q150,Q151	TRANS, N-CHAN MOSFET, TN254ON8	TG-274
Q125,Q158,Q103,Q157	TRANS, N CHANNEL FET, 2N4392	TG-128-1
Q127,Q128,Q131,Q132,Q133	TRANS, N-MOSFET, VN0605T	TG-243
Q130	NPN SILICON TRANSISTOR	TG-309
Q156	TRANS, PNP SILICON, 2N3906	TG-84
Q162,Q120	TRANS, PNP, BC860C	TG-323
R101,R102	RES, 1M, 5%, 125MW, METAL FILM	R-375-1M

Table 6-1 (continued)
Model 2750 motherboard parts list

Circuit Designation	Description	Keithley Part No.
R104,R105	RES, 549K, .1%, 1/4W, METAL FILM	R-315-549K
R106	RES, 11K, .1%, 1/10W, METAL FILM	R-263-11K
R107	RES, 49.9, 1%, 1/4W, METAL FILM	R-391-49.9
R108,R207,R336	RES, 24.9K, 1%, 100MW, THICK FILM	R-418-24.9K
R109,R134,R167,R194,R195	RES, 1K, 1%, 1/4W, METAL FILM	R-391-1K
R110,R133,R405	THICK FILM	TF-280-1
R111,R140,R165,R190,R197,R200, R203,R279	RES, 1K, 1%, 100MW, THICK FILM	R-418-1K
R112,R116,R221	RES, 15k, 1%, 100MW, THICK FILM	R-418-15K
R113,R188	RES, 49.9, 1%, 1/4W, METAL FILM	R-391-49.9
R114,R122,R199	RES, 604, 1%, 100MW, THICK FILM	R-418-604
R115,R175,R176,R324,R132,R139	RES, 2.49K, 1%, 1/4W, METAL FILM	R-391-2.49K
R117	RES NET, VARIOUS, .1%, MDN460	TF-255
R118,R103,R160,R174,R361,R362, R365,R366	RES, 499, 1%, 1/4W, METAL FILM	R-391-499
R119,R384,R385	RES, 15K, 1%, 1/4W, METAL FILM	R-391-15K
R120,R130,R154,R183,R186,R191, R193,R315	RES, 100K, 1%, 100MW, THICK FILM	R-418-100K
R121,R391,R395,R352	RES, 100K, 1%, 100MW, THICK FILM	R-418-100K
R123	RES, 73.2K, 1%, 100MW, THICK FILM	R-418-73.2K
R124,R150,R211,R240,R258,R268, R271	RES, 49.9K, 1%, 100MW, THICK FILM	R-418-49.9K
R125,R230,R232,R163,R305	RES, 49.9K, 1%, 100MW, THICK FILM	R-418-49.9K
R126,R128,R185,R275	RES, 475, 1%, 1/4W, METAL FILM	R-391-475
R127,R144	RES, 2.49K, 1%, 1/4W, METAL FILM	R-391-2.49K
R129	RES, 215, 1%, 100MW, THICK FILM	R-418-215
R131,R136,R138,R141,R161, R178-R180,R184	RES, 100, 1%, 1/4W, METAL FILM	R-391-100
R135	RES, 33.2K, 1%, 100MW, THICK FILM	R-418-33.2K
R142	RES, 10, 5%, 125MW, METAL FILM	R-375-10
R143,R152,R164,R242,R253	RES, 100K, 1%, 1/4W, METAL FILM	R-391-100K
R145,R156,R196,R213,R257,R270, R300,R303	RES, 100, 1%, 100MW, THICK FILM	R-418-100
R146	RES, 1.1M, 5%, 125MW, METAL FILM	R-375-1.1M
R147	RES, 732K,1%, 100MW, THICK FILM	R-418-732K
R148,R301,R356,R372	RES, 499, 1%, 1/4W, METAL FILM	R-391-499
R149,R151	RES, 1.5K, 1%, 100MW, THICK FILM	R-418-1.5K
R153	RES, NET, 3.6K, MICRO DIVIDER	TF-246-1
R155,R169,R201,R214,R218,R229, R244,R351	RES, 4.75K, 1%, 100MW, THICK FILM	R-418-4.75K

Table 6-1 (continued)
Model 2750 motherboard parts list

Circuit Designation	Description	Keithley Part No.
R157,R243	RES, 499, 1%, 100MW, THICK FILM	R-418-499
R158	RES, .1, 1%, 2W, 4-TERMINAL MOLDED	R-342-.1
R159,R360,R168,R182,R239,R247, R266,R272	RES, 1K, 1%, 1/4W, METAL FILM	R-391-1K
R162,R166	RES, 560K, 5%, 250MW, METAL FILM	R-376-560K
R170	RES, 2.21, 1%, 100MW, THICK FILM	R-418-2.21
R171	RES, 100K, .1%, .125W, THIN FILM	R-456-100K
R172,R339,R343	RES, 1M, 1%, 100MW, THICK FILM	R-418-1M
R173	RES, 1K, .1%, .125W, THIN FILM	R-456-1K
R177	RES, 100K, 1%, 1/4W, METAL FILM	R-391-100K
R181,R202,R204,R206,R208,R210, R220,R223	RES, 10K, 1%, 100MW, THICK FILM	R-418-10K
R187,R425,R427,R429,R431,R433, R435,R437	RES, 100, 1%, 1/4W, METAL FILM	R-391-100
R189	RES, 3.01K, 1%, 1/4W, METAL FILM	R-391-3.01K
R192	RES, 6.98K, 1%, 1/4W, METAL FILM	R-391-6.98K
R198	RES, 70K, 1%, .3W, 300V, METAL FOIL	R-449-70K
R205,R338	RES, 10, .5%, 1/8W, METAL FILM	R-246-10
R209	RES, 332K, 1%, 100MW, THICK FILM	R-418-332K
R212,R217	RES, 2.21K, 1%, 100MW, THICK FILM	R-418-2.21K
R215	RES, 4.42K, 1%, 1/4W, METAL FILM	R-391-4.42K
R216	RES, 2.87K, 1%, 1/4W, METAL FILM	R-391-2.87K
R219	RES, 2K, 1%, 100MW, THICK FILM	R-418-2K
R222	RES, 56.2K, 1%, 100MW, THICK FILM	R-418-56.2K
R224,R231,R348,R389,R420,R422, R423,R424	RES, 10K, 1%, 100MW, THICK FILM	R-418-10K
R225	RES, 470, 5%, 125MW, METAL FILM	R-375-470
R226	RES, 475, 1%, 100MW, THICK FILM	R-418-475
R228,R235,R237,R245,R250,R252, R255	RES, 475, 1%, 100MW, THICK FILM	R-418-475
R233,R238,R254,R276,R282, R291-R293,R319	RES, 10K, 1%, 100MW, THICK FILM	R-418-10K
R234	RES, 5.11K, 1%, 100MW, THICK FILM	R-418-5.11K
R236	RES, 700, 1%, .3W, FOIL	R-449-700
R241	RES, 34K, 1%, 100MW, THICK FILM	R-418-34K
R246	RES, 82.5, 1%, 100MW, THICK FILM	R-418-82.5
R248,R261,R294,R295,R331,R332, R227,R364	RES, 100, 1%, 100MW, THICK FILM	R-418-100
R249	RES, 4.02K, 1%, 100MW, THICK FILM	R-418-4.02K

Table 6-1 (continued)
Model 2750 motherboard parts list

Circuit Designation	Description	Keithley Part No.
R251,R256,R263,R284,R288, R298,R340	RES, 1K, 1%, 100MW, THICK FILM	R-418-1K
R259,R320	RES, 10, 10%, 100MW, THICK FILM	R-418-10
R262	RES, 20K, 1%, 100MW, THICK FILM	R-418-20K
R264,R392,R396	RES, 4.75K, 1%, 100MW, THICK FILM	R-418-4.75K
R265	RES, 2.2M, 10%, 1/2W, 1.5KV, METAL OXIDE	R-367-2.2M
R267,R269	RES, 24.9K, 1%, 100MW, THICK FILM	R-418-24.9K
R273,R274,R307,R314, R406-R416,R426,R428	RES, 475, 1%, 1/4W, METAL FILM	R-391-475
R277	RES, 66.5K, 1%, 100MW, THICK FILM	R-418-66.5K
R278,R281	RES, 357, 1%, 100MW, THICK FILM	R-418-357
R280	RES, 49.9, 1%, 100MW, THICK FILM	R-418-49.9
R285	RES, 80.6K, 1%, 100MW, THICK FILM	R-418-80.6K
R286	RES, 2K, 1%, 100MW, THICK FILM	R-418-2K
R287,R316,R317,R349	RES, 1.28M, .1%, 1/8W, METAL FILM	R-176-1.28M
R289,R296,R299,R342,R337,R383, R390,R394	RES, 1K, 1%, 100MW, THICK FILM	R-418-1K
R290,R325-R330,R346	RES, 49.9K, 1%, 100MW, THICK FILM	R-418-49.9K
R297,R321,R322	RES, 2.21K, 1%, 100MW, THICK FILM	R-418-2.21K
R302	RES, 499, 1%, 100MW, THICK FILM	R-418-499
R304	RES, 20K, 1%, 100MW, THICK FILM	R-418-20K
R306	RES, 4.99K, 1%, 1/4W, METAL FILM	R-391-4.99K
R308,R347,R399	RES, 100, 1%, 100MW, THICK FILM	R-418-100
R309	RES, 1K, .1%, 1/10W, METAL FILM	R-263-1K
R310	RES, 9.09K, .1%, 1/10W, METAL FILM	R-263-9.09K
R311	RES, 392, 1%, 100MW, THICK FILM	R-418-392
R312,R313	RES, 332K, 1%, 100MW, THICK FILM	R-418-332K
R318	RES, 73.2K, 1%, 100MW, THICK FILM	R-418-73.2K
R323	RES, 150, 1%, 100MV, THIN FILM	R-438-150
R333,R334,R344,R345,R370,R371, R378,R382	RES, 10K, 1%, 100MW, THICK FILM	R-418-10K
R335	RES, 33, 5%, 250MW, METAL FILM	R-376-33
R341,R421	RES, 1K, 1%, 100MW, THICK FILM	R-418-1K
R350	RES, 6.04K, 1%, 125MW, THIN FILM	R-423-6.04K
R353	RES, 200, 1%, 100MW, THICK FILM	R-418-200
R354	RES, 200, 1%, 100MW, THICK FILM	R-418-200
R355,R359,R363,R367,R397,R403	RES, 4.75K, 1%, 100MW, THICK FILM	R-418-4.75K
R357	RES, 10K, 1%, 100MW, THICK FILM	R-418-10K
R368	RES, 100, 1%, 100MW, THICK FILM	R-418-100

Table 6-1 (continued)
Model 2750 motherboard parts list

Circuit Designation	Description	Keithley Part No.
R369	RES, 10M, 1%, 125MW, THICK FILM	R-418-10M
R386	RES NET 50K, 1%, .5W, THICK FILM	TF-243-50K
R387	RESISTOR NETWORK, 10K-10K	TF-236
R388	RES NET 5K, .1%, 668A	TF-243-5K
R398	RES, 1K, 1%, 100MW, THICK FILM	R-418-1K
R417-R419,R283,R358	RES, 10K, 1%, 100MW, THICK FILM	R-418-10K
R430,R432,R434,R436,R438,R440, R442	RES, 475, 1%, 1/4W, METAL FILM	R-391-475
R439,R441	RES, 100, 1%, 1/4W, METAL FILM	R-391-100
RV101,RV102	VAR, 576V METAL OXIDE, 510L40	VR-5
RV103	TRANSIENT VOLTAGE SUPPRESSOR	VR-25
RV104,RV105	BIDIRECTIONAL TRANSIENT VOLT SUPPRESSOR	VR-8
S101	SWITCH, PUSHBUTTON, 8 POLE	SW-468
SA101	SURGE ARRESTOR, CG3-1.5AL	SA-4
SA102,SA103	SURGE ARRESTOR	SA-8
SO156,SO157	SOCKET PLCC-032-T-A	SO-143-32
ST100	STANDOFF	ST-204-2
TP102,TP105	CONN, TEST POINT	CS-553
TP103,TP104,TP106,TP107	SURFACE MOUNT PCB TEST POINT	CS-1026
U101	IC, VOLTAGE REG, LM317M	IC-846
U102,U118	IC, J-FET, OP-AMP, TLE2081CD	IC-967
U103,U105,U111,U129	IC, CMOS ANALOG SWITCH, DG211DY	IC-768
U104,U200,U201,U205	IC, MOSFET DRIVER, TLP591B	IC-877
U106,U109,U121,U130,U134, U203,U207	IC, 8 STAGE SHIFT/STORE, MC14094BD	IC-772
U107,U108,U126,U199	IC, PHOTO, DARLINGTON TRANS, PS2506L-1	IC-911
U110	IC, TRMS TO DC CONVERTER, 637JR	IC-796
U112	IC, J-FET OP-AMP, LF357M	IC-966
U113	IC, OP-AMP, LTC1050CS8	IC-791
U114,U167	IC, DUAL J-FET OP-AMP, OP-282GS,	IC-968
U115,U198	IC, QUAD COMPARATOR, LM339D	IC-774
U116,U202	IC, DARLINGTON ARRAY, ULN2003L	IC-969
U117,U145	IC, VOLT COMPARATOR, LM311M	IC-776
U119	IC, -15V VOLTAGE REGULATOR	IC-1334
U120,U131,U169,U186	IC, VOLT COMPARATOR, LM393D	IC-775
U122,U180	IC, QUAD 2 INPUT OR, 74HCT32	IC-808
U123	IC, DUAL PICOAMP OP-AMP, AD706JR	IC-910
U124	IC, +5V VOLTAGE REGULATOR	IC-1371

Table 6-1 (continued)
Model 2750 motherboard parts list

Circuit Designation	Description	Keithley Part No.
U125	IC, +15V VOLTAGE REGULATOR	IC-1241
U127,U173,U174,U181,U196	IC, QUAD 2 IN AND, 74HCT08	IC-837
U128,U166	IC, OP-AMP, MC34081BD	IC-1058
U132,U138,U139,U190	IC, OPA177GS	IC-960
U133,U208	IC, CMOS ANAL SWITCH, DG444DY	IC-866
U135	IC, 32-BIT MICROCONTROLLER, 20MHZ	LSI-203-20
U136	IC, 2048 X 8 SERIAL E 2 PROM	IC-1318
U137	IC, HI-SPEED BIFET OP-AMP, AD711JR	IC-894
U140,U143	IC, PHOTO TRANS, TLP626BV-LFI	IC-1006
U141	IC, PRECISION REFERENCE, LM399	196-600A
U142	IC, OP-AMP, NE5534D	IC-802
U144	IC, +5V VOLTAGE REGULATOR, LM2940CT	IC-576
U146,U179	IC, POS NAND GATES/INVERT, 74HCT14	IC-656
U147,U191	IC, TINYLOGIC CMOS INVERTER	IC-1282
U148,U153	IC, QUAD 2 IN NOR, 74HCT02	IC-809
U149	IC, NCHAN LAT DMOS QUADFET, SD5400CY	IC-893
U150	IC, OPTOCOUPLER, 2611	IC-690
U151,U152,U164,U193	IC, 512K X 8 BIT CMOS SRAM	LSI-234-70
U154	IC, QUAD D FLIP FLOP W/CLK, RESET, 74HC175	IC-923
U155	IC, OPTOCOUPLER, 2601	IC-239
U156	PROGRAMMED ROM	2750-800A01*
U157	PROGRAMMED ROM	2750-801A01*
U158	IC, GPIB ADAPTER, 9914A	LSI-123
U159	IC, +5V RS-232 TRANSCEIVER, MAX202	IC-952
U160	IC, OCTAL INTERFACE BUS, 75160	IC-646
U161	IC, OCTAL INTER BUS TRANS, 75161	IC-647
U163	IC, 8-CHAN ANA MULTIPLEXER, DG408DY	IC-844
U165	PROGRAMMED ROM	2000-802A02*
U168,U183,U184	IC, DUAL D-TYPE F/F, 74HC74	IC-773
U170	IC, 2-INPUT OR GATE	IC-1206
U171	IC, PHANTOM TIME CHIP	IC-1317
U175	IC, DUAL HIGH CMR/SPEED OPTO, HCPL-2631	IC-588
U182	IC, RETRIG., MULTIVIB, 74HC123AM	IC-788
U187	INTERGRATED CIRCUIT SMT	IC-1423
U188,U189	IC, PROTECTED QUAD POWER DRIVERS	IC-1212

Table 6-1 (continued)
Model 2750 motherboard parts list

Circuit Designation	Description	Keithley Part No.
U192	IC, 2 - INPUT AND GATE	IC-1140
U194	IC, CONTROLLER WITH MONITOR	IC-1424
U195	IC, 3 TO 8 LINE DECODER	IC-1378
U206,U162	IC, PRECISION BIFET OPAMP	IC-1194
VR100,VR101,VR102	DIODE, ZENER, 6.0V, BZX84B6V2	DZ-87
VR103,VR104	DIODE, ZENER, 6.8V, MMSZ5235BT1	DZ-100
VR105,VR106	DIODE, ZENER, 11V, MMSZ11T1	DZ-103
VR107,VR108	DIODE, ZENER, 4.3V, BZX84C4V3	DZ-85
VR109	DIODE, ZENER, 17V, MMBZ5247BL	DZ-104
VR110,VR111	DIODE, ZENER, 10V, MMSZ5240B	DZ-99
VR112,VR113,VR116,VR117, VR119,VR120	DIODE, ZENER, 6.2V, MMSZ6V2	DZ-97
VR114,VR115	DIODE, ZENER, 3.3V, CMPZ4684	DZ-115
Y101,Y103	CRYSTAL, FSM327	CR-41
Y102	OSCILLATOR HIGH SPEED CMOS, 12MHZ	CR-37

*Order current firmware revision (for example, A01).

Table 6-2
Model 2750 display board parts list

Circuit Designation	Description	Keithley Part No.
C401-C405,C407,C409-C412	CAP, .1UF, 20%, 50V, CERAMIC	C-418-.1
C406,C408	CAP, 33PF, 10%, 100V, CERAMIC	C-451-33P
C413	CAP, 22UF, 20%, 6.3 TANTALUM	C-417-22
C414	CAP, 47PF, 10%, 100V, CERAMIC	C-451-47P
C415,C416	CAP, 1000PF, 10%, 100V, CERAMIC	C-451-1000P
CR401,CR402	DIODE, MBR0520LT1	RF-103
DS401	DISPLAY	DD-61
J1	CONN, RT ANGLE HEADER, 16 PIN	CS-1066-3
LED1,LED2,LED3,LED4,LED5	PILOT LIG, HSMH-T400, LED	PL-92-1
LPI1,LPI2,LPI3,LPI4,LPI5	VERTICAL LIGHT PIPE	PL-117-1
R401-R404,R406,R409,R411, R414-R418	RES, 15k, 1%, 100MW, THICK FILM	R-418-15K
R405,R408,R410,R412	RES, 12.1, 1%, 1/4W, METAL FILM	R-391-12.1
R413	RES, 13K, 1%, 100MW, THICK FILM	R-418-13K
R419	RES, 10M, 5%, 125MW, METAL FILM	R-375-10M
R420,R421	RES, 10K, 1%, 100MW, THICK FILM	R-418-10K
R451-R455	RES, 1.21K, 1%, 100MW, THICK FILM	R-418-1.21K
U401	PROGRAMMED MICROCONTROLLER	2750-802A01*
U402,U403	IC, LATCHED DRIVERS, UCN-5812EPF-1	IC-732
U406	IC, DARLINGTON ARRAY, ULN2003L	IC-969
Y401	CRYSTAL, 4MHZ	CR-36-4M

*Order current firmware revision (for example, A01).

Table 6-3
Model 2750 backplane board parts list

Circuit Designation	Description	Keithley Part No.
J1,J2	CONN 2 ROWS OF 16 PINS	CS-736-4
J1,J2,J3	CONN 2 ROWS OF 16 PINS	CS-736-4
J3	CONN, RT ANGLE, HEADER	CS-1066-1
J4	CONN, RT, ANGLE, HEADER, 26 PIN	CS-1066-2
J4,J5	CONN, FEMALE, 8 PIN	CS-612-8
J5	CONN, FEMALE, 8 PIN	CS-612-8
J6	CONN, MALE, 3 PIN	CS-612-1
J6,J7	CONN, MALE, 3 PIN	CS-612-1
L1,L2	FERRITE CHIP, 600 OHM, BLM32A07	CH-62
L1-L3	FERRITE CHIP, 600 OHM, BLM32A07	CH-62
R1,R3	RES, 4.75K, 1%, 100MW, THICK FILM	R-418-4.75K
R1,R4	RES, 4.75K, 1%, 100MW, THICK FILM	R-418-4.75K
R2,R3,R5-R19	RES, 475, 1%, 1/4W, METAL FILM	R-391-475
R2,R4-R13	RES, 475, 1%, 1/4W, METAL FILM	R-391-475

Table 6-4
Model 2750 miscellaneous parts list

Qty.	Description	Keithley Part No.
1	3 SLOT CARD CAGE	2750-316B
1	5X20MM SNAP-IN FUSE HOLDER	FH-40
2	BANANA JACK, PUSH-IN, BLACK	BJ-14-0
2	BANANA JACK, PUSH-IN, RED	BJ-14-2
1	BANANA JACK, PUSH-IN, WHITE	BJ-14-9
1	CARD CAGE	2700-318A
1	CARD CAGE SUPPORT	2750-313A
1	COND. RUBBER SWITCH	2750-310A
37	CONNECTOR	CS-236
4	CONNECTOR	CS-638-8
1	CONNECTOR, HARDWARE KIT	CS-713
4	CONNECTOR, HOUSING	CS-638-3
1	CONNECTOR, MODULES	CS-638-12
1	COVER	2750-309A
1	DISPLAY LENS	2750-307A
4	FOOT MOLDED	24322
4	FOOT, RUBBER	FE-6
1	FRONT PANEL	2750-305A
1	FRONT/REAR ROD	2700-319A
1	FUSE HOLDER	FH-35-1
1	FUSE, .630A, 250V, SLO BLO FUSE	FU-106-.630
1	FUSE, 3A, 250	FU-99-1
2	HANDLE	HH-30-7
1	LINE CORD	CO-7
1	LINE MODULE	PM-1-1B
1	MOTHER BD SUPPORT BRACKET	2750-314A
1	POWER ROD	704-313A
1	REAR PANEL	2750-303A
1	RUBBER GROMMET	GR-55-1
4	SCREWLOCK, FEMALE	CS-725
5	SOCKET CONNECTOR	CS-984-1
1	TEST LEADS	CA-22
1	TILT BAIL	2750-319A
1	TRANSFORMER	TR-347A

Table 6-5
Model 7700 module parts list

Circuit Designation	Description	Keithley Part No.
C1,C9,C10,C11,C14,C15,C22,C4	CAP, 0.1UF, 20%, 50V, CERAMIC	C-418-.1
C16	CAP, 220U, 20%, 10V, TANTALUM	C-558-220
C17,C18,C19,C21,C25,C26,C23, C24,C15	CAP, 47P, 5%, 100V, CERAMIC	C-465-47P
C2,C6,C7,C8,C12,C13,C20,C27, C28,C31	CAP, 0.1UF, 20%, 50V, CERAMIC	C-418-.1
C29,C32,C33,C34	CAP, 47P, 5%, 100V, CERAMIC	C-465-47P
C30	CAP, 4.7U, 10%, 35V, TANTALUM	C-476-4.7
CR1,CR22	DIODE, DUAL SWITCHING, BAV99L	RF-82
CR23,CR24,CR26,CR27	DIODE, SWITCHING, MMBD914	RF-83
CR2-CR21,CR25	DIODE, DUAL SWITCHING, BAV99L	RF-82
F1,F2	FUSE, 3A	FU-107-1
J1	CONN, RT ANGLE DUAL ROW RECEPT	CS-1065-1
K1-K21,K24,K25,K26,K27	SINGLE COIL LATCH RELAY	RL-225
K22,K23	NON LATCHING RELAY	RL-242
Q1	N-CHANNEL/P-CHANNEL POWER MOSFET	TG-360
Q2,Q4	TRANS, PNP SILICON	TG-388
Q3,Q6,Q49,Q50	TRANS, NPN SILICON	TG-389
Q34,36,38,40,42,44,46,7	TRANS, PNP SILICON	TG-388
Q35,37,39,41,43,45,47,48	TRANS, NPN SILICON	TG-389
Q5	P CHANNEL TMOSFET	TG-392
Q8,10,12,14,16,18,20,22,24,26,28, 30,32	TRANS, PNP SILICON	TG-388
Q9,11,13,15,17,19,21,23,25,27,29, 31,33	TRANS, NPN SILICON	TG-389
R1	RES, 69.8K, 1%, 1W, THICK FILM	R-418-69.8K
R10,R11,R12	RES, 4.7K, 5%, 125MW, METAL FILM	R-375-4.7K
R108,R109,R110,R111,R3,R150	RES, 1K, 1%, 100MW, THICK FILM	R-418-1K
R13,R14	RES, 3.01K, 1%, 125MW, METAL FILM	R-391-3.01K
R15-R54,R58,R59	RES, 4.22K, 1%, 125MW, METAL FILM	R-391-4.22K
R2	RES, 10K, 1%, 100MW, THICK FILM	R-418-10K
R4,R5,R6,R7	RES, 2.21K, 1%, 125MW, METAL FILM	R-391-2.21K
R8	RES, 1K, 5%, 125MW, METAL FILM	R-375-1K
R9	RES, 1K, 5%, 125MW, METAL FILM	R-375-1K
R55,R56,R57	RES, 470, 5%, 125MW, METAL FILM	R-375-470

Table 6-5 (continued)
Model 7700 module parts list

Circuit Designation	Description	Keithley Part No.
R60,R61	RES, 4.22K, 1%, 125MW, METAL FILM	R-391-4.22K
R62,R63	RES, 137, 1%, 125MW, METAL FILM	R-391-137
R64,R65,R66,R67,R68,R69,R70, R71	RES, 499, 1%, 100MW, THICK FILM	R-418-499
TE101-TE110,TE122	CONN, 4-PIN, JOLO BB-125-04	TE-115-4
TE-121	CONN, 6-PIN	TE-115-6
U1,U2,U3,U4,U8	IC, 8 STAGE SHIFT/STORE, MC14094BD	IC-772
U11,U12,U13,U15,U17,U18	IC, CENTIGRADE TEMP SENSOR, LM35DM	IC-906
U14	IC, RETRIG., MULTIVIB, 74HC123AM	IC-788
U16	IC, 2.5V, CASCADABLE SERIAL EEPROM	LSI-212
U24	IC, QUAD 2 IN AND, 74HCT08	IC-837
U6	IC, 8-CHAN ANA MULTIPLEXER, DG408DY	IC-844
U7,U25	IC, POS NAND GATES/INV, 74HCT14	IC-656
U9,U10	IC, DUAL OPTO	IC-1358
	TOP COVER HEAT STAKE ASSEMBLY	7700-302A
	BOTTOM CARD COVER	7702-301C
	COMPRESSION SPRING	SP-7-3

A
Accuracy and Optimization

Accuracy calculations

The information below discusses how to calculate accuracy for both DC and AC characteristics.

Calculating DC characteristics accuracy

DC characteristics accuracy is calculated as follows:

Accuracy = ±(ppm of reading + ppm of range)

(ppm = parts per million, and 10ppm = 0.001%)

As an example of how to calculate the actual reading limits, assume that you are measuring 5V on the 10V range. You can compute the reading limit range from one-year DCV accuracy specifications as follows:

Accuracy = ±(30ppm of reading + 5ppm of range)
±[(30ppm × 5V) + (5ppm × 10V)]
±(150µV + 50µV)
±200µV

Thus, the actual reading range is: 5V± 200µV, or from 4.9998V to 5.0002V.

DC current and resistance calculations are performed in exactly the same manner using the pertinent specifications, ranges, and input signal values.

Calculating AC characteristics accuracy

AC characteristics accuracy is calculated similarly, except that AC specifications are given as follows:

Accuracy = ±(% of reading + % of range)

As an example of how to calculate the actual reading limits, assume that you are measuring 120V, 60Hz on the 750V range. You can compute the reading limit range from ACV one-year accuracy specifications as follows:

Accuracy = ±(0.06% of reading + 0.03% of range)
±[(0.0006 × 120V) + (0.0003 × 750V)]
±(0.072V + 0.225V)
±0.297V

In this case, the actual reading range is: 120V ±0.297V, or from 119.703V to 120.297V.

AC current calculations are performed in exactly the same manner using the pertinent specifications, ranges, and input signal values.

Calculating dBm characteristics accuracy

As an example of how to calculate the actual reading limits for a 13dBm measurement with a reference impedance of 50Ω, assume an applied signal 0.998815V. The relationship between voltage and dBm is as follows:

$$\text{dBm} = 10\log\frac{V_{IN}^2/R_{REF}}{1\text{mW}}$$

From the previous example on calculating DC characteristics accuracy, it can be shown that a measurement of 0.998815V on the 1V range has an uncertainty of ±36.9644mV, or 0.998778V to 0.998852V, using one-year specifications.

Expressing 0.998778V as dBm:

$$\text{dBm} = 10\log\frac{(0.998778\text{V})^2/50\Omega}{1\text{mW}} = 12.99968\text{dBm}$$

and expressing 0.998852V as dBm:

$$\text{dBm} = \frac{(0.998852\text{V})^2/50\Omega}{1\text{mW}} = 13.00032\text{dBm}$$

Thus, the actual reading range is 13dBm ±0.00032dBm.

dBm and dB for other voltage inputs can be calculated in exactly the same manner using pertinent specifications, ranges, and reference impedances.

Calculating dB characteristics accuracy

The relationship between voltage and dB is as follows:

$$\text{dB} = 20\log\frac{V_{IN}}{V_{REF}}$$

As an example of how to calculate the actual readings limits for dB, with a user-defined VREF of 10V, you must calculate the voltage accuracy and apply it to the above equation.

To calculate a -60dB measurement, assume 10mV RMS for a VREF of 10V. Using the 100mV range, one-year, 10Hz - 20kHz frequency band, and SLOW rate, the voltage limits are as follows:

Accuracy = ±[(0.06% of reading) + (0.03% of range)]
±[(0.0006 × 10mV) + (0.0003 × 100mV)]
±[6µV + 30µV]
±36µV

Thus, the actual reading accuracy is 10mV ±36mV or 10.036mV to 9.964mV. Applying the voltage reading accuracy into the dB equation yields:

$$\text{dBm} = 20\log\frac{10.036\text{mV}}{10\text{V}} = -59.96879\text{dB}$$

$$\text{dBm} = 20\log\frac{9.964\text{mV}}{10\text{V}} = -60.03133\text{dB}$$

Thus, the actual reading accuracy is -60dB + 0.031213dB to -60dB - 0.031326dB.

dBm and dB for other voltage inputs can be calculated in exactly the same manner using pertinent specifications, ranges, and other reference voltages.

Additional derating factors

In some cases, additional derating factors must be applied to calculate certain accuracy values. For example, an additional derating factor of 0.02ppm/V must be added to DCV specifications for voltages over 500V. Before calculating accuracy, study the associated specifications very carefully to see if any derating factors apply.

Optimizing measurement accuracy

The configurations listed below assume that the multimeter has had factory setups restored.

DC voltage, DC current, and resistance:

- Select 6-1/2 digits, 10 PLC, filter ON (up to 100 readings), fixed range.
- Use REL on DC voltage and 2-wire resistance measurements.
- Use 4-wire resistance measurements with offset compensation for best accuracy.

AC voltage and AC current:

- Select 6-1/2 digits, 10 PLC, filter ON (up to 100 readings), fixed range.

Temperature:

- Select 6-1/2 digits, 10 PLC, filter ON (up to 100 readings).

Optimizing measurement speed

The configurations listed below assume that the multimeter has had factory setups restored.

DC voltage, DC current, and resistance:

- Select 3-1/2 digits, 0.01 PLC, filter OFF, fixed range.

AC voltage and AC current:

- Select 3-1/2 digits, 0.01 PLC, filter OFF, fixed range.

Temperature:

- Select 3-1/2 digits, 0.01 PLC, filter OFF.

For all functions, turn off the display and autozero, and set the trigger delay to zero. Use the :SAMPle:COUNt and READ? bus commands.

B
Calibration Reference

Introduction

This appendix contains detailed information about the various Model 2750 remote calibration commands. Section 2 of this manual covers detailed calibration procedures. For information about additional commands to control other instrument functions, refer to the Model 2750 User's Manual.

Command summary

Table B-1 summarizes Model 2750 calibration commands.

Table B-1
Remote calibration command summary

Command	Description
:CALibration	Calibration root command.
:PROTected	All commands in this subsystem are protected by the calibration lock (except queries and :CODE).
:CODE <up to 8 char. string>	Calibration code or password (default: KI002750).
:COUNt?	Request the number of times the unit has been calibrated.
:INITiate	Initiate calibration.
:LOCK	Lock out calibration (opposite of enabling cal with :CODE command).
:LOCK?	Request comprehensive cal lock state. (0 = locked; 1 = unlocked.)
:SAVE	Save cal constants to EEROM.
:DATE <year>, <month>, <day>	Send cal date to 2750.
:DATE?	Request cal date from 2750.
:NDUE <year>, <month>, <day>	Send next due cal date to 2750.
:NDUE?	Request next due cal date from 2750.
:DC	DC cal steps.
:STEP0	Rear scanner terminals short step[1].
:STEP1	Front terminal short circuit.
:STEP2	Open circuit.
:STEP3 <NRf>	10V DC step.
:STEP4 <NRf>	–10V DC step.
:STEP5 <NRf>	100V DC step.
:STEP6 <NRf>	100Ω 4-wire step.
:STEP7 <NRf>	10kΩ 4-wire step.
:STEP8 <NRf>	100kΩ 4-wire step.
:STEP9 <NRf>	1MΩ 4-wire step.

Table B-1 (continued)
Remote calibration command summary

Command	Description
:CALibration	
:PROTected	
:DC	
:STEP10 <NRf>	10mA DC step.
:STEP11 <NRf>	100mA DC step.
:STEP12 <NRf>	1A DC step.
:AC	AC cal steps.
:STEP1	10mV AC at 1kHz step.
:STEP2	100mV AC at 1kHz step.
:STEP3	100mV AC at 50kHz step.
:STEP4	1V AC at 1kHz step.
:STEP5	1V AC at 50kHz step.
:STEP6	10V AC at 1kHz step.
:STEP7	10V AC at 50kHz step.
:STEP8	100V AC at 1kHz step.
:STEP9	100V AC at 50kHz step.
:STEP10	700V AC at 1kHz step.
:STEP11	100mA AC at 1kHz step.
:STEP12	1A AC at 1kHz step.
:STEP13	2A AC at 1kHz step.
:STEP14	1V AC at 3Hz step[1].
:STEP15	1V AC at 1kHz step[1].

Note: Upper-case letters indicated short form of each command. For example, instead of sending ":CALibration:PROTected:INITiate," you can send ":CAL:PROT:INIT."

[1]DC:STEP0, AC:STEP14, and AC:STEP15 are one-time factory calibration points and are valid only in manufacturing calibration mode.

Miscellaneous calibration commands

Miscellaneous commands perform miscellaneous calibration functions such as programming the calibration code and date. These commands are discussed in detail in the following paragraphs.

:CODE

(:CALibration:PROTected:CODE)

Purpose: To program the calibration code or password so that you can perform the calibration procedures.

Format: `:cal:prot:code '<char_string>'`

Parameters: Up to an 8-character string including letters and numbers.

Description: The `:CODE` command enables the Model 2750 calibration procedures when performing these procedures over the bus. In general, this command must be sent to the unit before sending any other comprehensive or manufacturing calibration command. The default calibration code is KI002750.

NOTE *The `:CODE` command should be sent only once before performing either the comprehensive or factory calibration. Do not send `:CODE` before each calibration step.*

To change the code, first send the present code, then send the new code.

The code parameter must be enclosed in single quotes.

Example: `:CAL:PROT:CODE 'KI002750'` Send default code of KI002750.

:COUNt?

(:CALibration:PROTected:COUNt?)

Purpose: To determine how many times the Model 2750 has been calibrated.

Format: `:cal:prot:coun?`

Response: <n> Calibration count.

Description: The `:COUNt?` command allows you to determine how many times the Model 2750 has been calibrated.

NOTE *Use the `:COUNt?` command to help you monitor for unauthorized calibration procedures.*

Example: `:CAL:PROT:COUN?` Request calibration count.

:INIT

(:CALibration:PROTected:INITiate)

Purpose To initiate comprehensive and factory calibration procedures.

Format `:cal:prot:init`

Parameters None

Description The `:INIT` command enables Model 2750 calibration when performing these procedures over the bus. This command must be sent to the unit after sending the `:CODE` command, but before sending any other calibration command.

NOTE The `:INIT` command should be sent only once before performing either DC, AC, or factory calibration. Do not send `:INIT` before each calibration step.

Example `:CAL:PROT:INIT` Initiate calibration.

:LOCK

(:CALibration:PROTected:LOCK)

Purpose To lock out comprehensive or manufacturing calibration.

Format `:cal:prot:lock`

Parameters None

Description The `:LOCK` command allows you to lock out both comprehensive and manufacturing calibration after completing those procedures. Thus, `:LOCK` performs the opposite of enabling calibration with the `:CODE` command.

NOTE To unlock comprehensive calibration, send the `:CODE` command. To unlock manufacturing calibration, hold in the OPEN key while turning on the power.

Example `:CAL:PROT:LOCK` Lock out calibration.

:LOCK?

(:CALibration:PROTected:LOCK?)

Purpose To read comprehensive calibration lock status.

Format `:cal:prot:lock?`

Response
0 Comprehensive calibration locked.
1 Comprehensive calibration unlocked.

Description The `:LOCK?` query requests status from the Model 2750 on calibration locked/unlocked state. Calibration must be enabled sending the `:CODE` command before calibration can be performed.

Example `:CAL:PROT:LOCK?` Request cal lock state.

:SAVE

(:CALibration:PROTected:SAVE)

Purpose To save calibration constants in EEROM after the calibration procedure.

Format `:cal:prot:save`

Parameters None

Description The `:SAVE` command stores internally calculated calibration constants derived during both comprehensive and manufacturing calibration in EEROM. (EEROM is non-volatile memory.) Calibration constants will be retained indefinitely once saved. Generally, `:SAVE` is sent after all other calibration steps (except for `:LOCK`).

NOTE Calibration will be only temporary unless the `:SAVE` command is sent to permanently store calibration constants.

Example `:CAL:PROT:SAVE` Save calibration constants.

:DATE

(:CALibration:PROTected:DATE)

Purpose To send the calibration date to the instrument.

Format `:cal:prot:date <year>, <month>, <day>`

Parameters <year> = 2000 to 2099
<month> = 1 to 12
<day> = 1 to 31

Query :cal:prot:date?

Response <year>, <month>, <day>

Description The `:DATE` command allows you to store the calibration date in instrument memory for future reference. You can read back the date from the instrument over the bus by using the `:DATE?` query or the CALIBRATION selection in the front panel CAL menu.

NOTE The year, month, and day parameters must be delimited by commas.

Example

`:CAL:PROT:DATE 2001,3,16`	Send cal date (3/16/2001).
`:CAL:PROT:DATE?`	Request cal date.

:NDUE

:CALibration:PROTected:NDUE)

Purpose To send the next calibration due date to the instrument.

Format `:cal:prot:ndue <year>, <month>, <day>`

Parameters <year> = 2000 to 2099
<month> = 1 to 12
<day> = 1 to 31

Query :cal:prot:ndue?

Response <year>, <month>, <day>

Description The `:NDUE` command allows you to store the date when calibration is next due in instrument memory. You can read back the next due date from the instrument over the bus by using the `:NDUE?` query or the front panel CAL menu.

NOTE The next due date parameters must be delimited by commas.

Example

`:CAL:PROT:NDUE 2002,3,16`	Send due date (3/16/2001).
`:CAL:PROT:NDUE?`	Request due date.

DC calibration commands

The :DC commands perform calibration of the DCV, DCI, and ohms functions. Table B-2 summarizes these calibration commands along with parameter limits.

Table B-2
DC calibration commands

Command	Description	Parameter Limits
:CALibration		
:PROTected		
:DC		
:STEP1	Front terminal short circuit.	
:STEP2	Open circuit.	
:STEP3 <NRf>	10V DC calibration step.	9 to 11
:STEP4 <NRf>	-10V DC calibration step.	-9 to -11
:STEP5 <NRf>	100V DC calibration step.	90 to 110
:STEP6 <NRf>	100Ω 4-wire calibration step.	90 to 110
:STEP7 <NRf>	10kΩ 4-wire calibration step.	9E3 to 11E3
:STEP8 <NRf>	100kΩ 4-wire calibration step.	90E3 to 110E3
:STEP9 <NRf>	1MΩ 4-wire calibration step.	900E3 to 1.1E6
:STEP10 <NRf>	10mA DC calibration step.	9E-3 to 11E-3
:STEP11 <NRf>	100mA DC calibration step.	90E-3 to 110E-3
:STEP12 <NRf>	1A DC calibration step.	0.9 to 1.1

:STEP1

(:CALibration:PROTected:DC:STEP1)

Purpose — To perform front terminal short-circuit calibration.

Format — `:cal:prot:dc:step1`

Parameters — None

Description — `:STEP1` performs the short-circuit calibration step in the comprehensive calibration procedure. Connect a low-thermal short (Model 8610) to the front panel input jacks before sending this command.

Example — `:CAL:PROT:DC:STEP1` Perform short-circuit calibration.

:STEP2

(:CALibration:PROTected:DC:STEP2)

Purpose To perform front terminal open-circuit calibration.

Format `:cal:prot:dc:step2`

Parameters None

Description `:STEP2` performs the open-circuit calibration step in the comprehensive calibration procedure. Disconnect all cables and accessories from the input jacks before sending this command.

Example `:CAL:PROT:DC:STEP2` Perform open circuit calibration.

:STEP3

(:CALibration:PROTected:DC:STEP3)

Purpose To program the +10V comprehensive calibration step.

Format `:cal:prot:dc:step3 <Cal_voltage>`

Parameters <Cal_voltage> = 9 to 11 [V]

Description `:STEP3` programs the +10V DC comprehensive calibration step. The allowable range of the calibration voltage parameter is from 9 to 11, but 10 is recommended for best results.

Example `:CAL:PROT:DC:STEP3 10` Program 10V step.

:STEP4

(:CALibration:PROTected:DC:STEP4)

Purpose To program the -10V DC comprehensive calibration step.

Format `:cal:prot:dc:step4 <Cal_voltage>`

Parameters <Cal_voltage> = -9 to -11 [V]

Description `:STEP4` programs the -10V DC comprehensive calibration step. The allowable range of the calibration voltage parameter is from -9 to -11, but -10 is recommended for best results.

Example `:CAL:PROT:DC:STEP4 -10` Program -10V step.

:STEP5

(:CALibration:PROTected:DC:STEP5)

Purpose To program the 100V DC comprehensive calibration step.

Format `:cal:prot:dc:step5 <Cal_voltage>`

Parameters <Cal_voltage> = 90 to 110 [V]

Description `:STEP5` programs the 100V DC comprehensive calibration step. The allowable range of the calibration voltage parameter is from 90 to 110, but 100 is recommended for best results.

Example `:CAL:PROT:DC:STEP5 100` Program 100V step.

:STEP6

(:CALibration:PROTected:DC:STEP6)

Purpose To program the 100Ω 4-wire comprehensive calibration step.

Format `:cal:prot:dc:step6 <Cal_resistance>`

Parameters <Cal_resistance> = 90 to 110 [Ω]

Description `:STEP6` programs the 100Ω 4-wire resistance comprehensive calibration step. The allowable range of the calibration resistance parameter is from 90 to 110 but 100 is recommended for best results.

Example `:CAL:PROT:DC:STEP6 100` Program 100Ω step.

:STEP7

(:CALibration:PROTected:DC:STEP7)

Purpose To program the 10kΩ 4-wire comprehensive calibration step.

Format `:cal:prot:dc:step7 <Cal_resistance>`

Parameters <Cal_resistance> = 9E3 to 11E3 [Ω]

Description `:STEP7` programs the 10kΩ 4-wire resistance comprehensive calibration step. The allowable range of the calibration resistance parameter is from 9E3 to 11E3, but 10E3 is recommended for best results.

Example `:CAL:PROT:DC:STEP7 10E3` Program 10kΩ step.

:STEP8

(:CALibration:PROTected:DC:STEP8)

Purpose To program the 100kΩ 4-wire comprehensive calibration step.

Format `:cal:prot:dc:step8 <Cal_resistance>`

Parameters <Cal_resistance> = 90E3 to 110E3 [Ω]

Description `:STEP8` programs the 100kΩ 4-wire resistance comprehensive calibration step. The allowable range of the calibration resistance parameter is from 90E3 to 110E3, but 100E3 is recommended for best results.

Example `:CAL:PROT:DC:STEP8 100E3` Program 100kΩ step.

:STEP9

(CALibration:PROTected:DC:STEP9)

Purpose To program the 1MΩ comprehensive calibration step.

Format `:cal:prot:dc:step9 <Cal_resistance>`

Parameters <Cal_resistance> = 900E3 to 1.1E6 [Ω]

Description `:STEP9` programs the 1MΩ comprehensive calibration step. The allowable range of the calibration resistance parameter is from 900E3 to 1.1E6. Use the 1E6 value whenever possible, or the closest possible value.

Example `:CAL:PROT:DC:STEP9` Program 1MΩ calibration step.

:STEP10

(CALibration:PROTected:DC:STEP10)

Purpose To program the 10mA comprehensive calibration step.

Format `:cal:prot:dc:step10 <Cal_current>`

Parameters <Cal_current> = 9E-3 to 11E-3 [A]

Description `:STEP10` programs the 10mA comprehensive calibration step. The allowable range of the calibration current parameter is from 9E-3 to 11E-3. Use the 10E-3 value whenever possible for best results.

Example `:CAL:PROT:DC:STEP10 10E-3` Program 10mA step.

:STEP11

(CALibration:PROTected:DC:STEP11)

Purpose To program the 100mA comprehensive calibration step.

Format `:cal:prot:dc:step11 <Cal_current>`

Parameters <Cal_current> = 90E-3 to 110E-3 [A]

Description `:STEP11` programs the 100mA comprehensive calibration step. The allowable range of the calibration current parameter is from 90E-3 to 110E-3. Use the 100E-3 value whenever possible for best results.

Example `:CAL:PROT:DC:STEP11 0.1` Program 100mA step.

:STEP12

(CALibration:PROTected:DC:STEP12)

Purpose To program the 1A comprehensive calibration step.

Format `:cal:prot:dc:step12 <Cal_current>`

Parameters <Cal_current> = 0.9 to 1.1 [A]

Description `:STEP12` programs the 1A comprehensive calibration step. The allowable range of the calibration current parameter is from 0.9 to 1.1. Use a value of 1 whenever possible for best results.

Example `:CAL:PROT:DC:STEP12 1` Program 1A step.

AC calibration commands

The :AC commands perform comprehensive (user) calibration of the ACV and ACI functions. Table B-3 summarizes these calibration commands.

Table B-3
AC calibration commands

Command	Description
:CALibration	
:PROTected	
:AC	
:STEP1	10mV AC at 1kHz calibration step.
:STEP2	100mV AC at 1kHz calibration step.
:STEP3	100mV AC at 50kHz calibration step.
:STEP4	1V AC at 1kHz calibration step.
:STEP5	1V AC at 50kHz calibration step.
:STEP6	10V AC at 1kHz calibration step.
:STEP7	10V AC at 50kHz calibration step.
:STEP8	100V AC at 1kHz calibration step.
:STEP9	100V AC at 50kHz calibration step.
:STEP10	700V AC at 1kHz calibration step.
:STEP11	100mA AC at 1kHz calibration step.
:STEP12	1A AC at 1kHz calibration step.
:STEP13	2A AC at 1kHz calibration step.

:AC:STEP<n>

(CALibration:PROTected:AC:STEP<n>)

Purpose To program individual AC calibration steps.

Format `:cal:prot:ac:step<n>`

Parameters

1	10mV AC at 1kHz calibration step.
2	100mV AC at 1kHZ calibration step.
3	100mV AC at 50kHz calibration step.
4	1V AC at 1kHz calibration step.
5	1V AC at 50kHz calibration step.
6	10V AC at 1kHz calibration step.
7	10V AC at 50kHz calibration step.
8	100V AC at 1kHz calibration step.
9	100V AC at 50khz calibration step.
10	700V AC at 1kHz calibration step.
11	100mA AC at 1kHz calibration step.
12	1A AC at 1kHz calibration step.
13	2A AC at 1kHz calibration step.

Description The `:AC:STEP` command programs the 13 individual AC calibration steps; <n> represents the calibration step number. The appropriate signal must be connected to the instrument when programming each step, as summarized in the parameters listed above.

Example `:CAL:PROT:AC:STEP7` Program 10V, 50kHz step.

Manufacturing calibration commands

NOTE To perform these steps, manufacturing calibration must be enabled by pressing and holding the OPEN key while turning on the power. See Section 2.

Three calibration steps are only performed at the factory or when the unit has been repaired:

`:CALibration:PROTected:AC:STEP14`	1V AC at 3Hz
`:CALibration:PROTected:AC:STEP15`	1V AC at 1kHz
`:CALibration:PROTected:DC:STEP0`	Rear scanner terminal short circuit

:AC:STEP<14|15>

(CALibration:PROTected:AC:STEP<14|15>)

Purpose: To program individual AC manufacturing calibration steps.

Format:
```
:cal:prot:ac:step14 <Cal_voltage>
:cal:prot:ac:step15 <Cal_frequency>
```

Parameters: <Cal_voltage> = 1 [1V nominal]
<Cal_frequency = 1E3 [1kHz nominal]

Description: The `:AC:STEP14` and `:AC:STEP:15` commands program the two manufacturing AC calibration steps. The appropriate signal must be connected to the instrument when programming each step, as summarized by the parameters listed above.

Example:

`:CAL:PROT:AC:STEP14 1`	Program AC step 14.
`:CAL:PROT:AC:STEP15 1E3`	Program AC step 15.

:DC:STEP0

(:CALibration:PROTected:DC:STEP0)

Purpose: To perform rear scanner terminal short-circuit calibration.

Format: `:cal:prot:dc:step0`

Parameters: None

Description: `:STEP0` performs the rear scanner terminal short-circuit calibration step in the manufacturing calibration procedure. Install an extender card with low-thermal shorts on the output terminals installed in Slot 1 and select the rear scanner inputs before sending this command.

Example:

`:CAL:PROT:DC:STEP0`	Perform rear short-circuit calibration.

Model 7700 calibration commands

Table B-4 summarizes calibration commands for the Model 7700 plug-in module. Note that CARD1 commands calibrate the card in Slot 1, while CARD commands request calibration count, date, and reference temperature information from a card in Slot 1 through Slot 5.

NOTE A Model 7700 must be installed in Slot 1 through a Model 7797 calibration/extender card to be calibrated. See Section 2, "Model 7700 calibration."

Table B-4
Model 7700 calibration commands

Command	Description
:CALibration	Calibration root command.
:PROTected	All commands in this subsystem are protected by the calibration lock (except queries and :CODE).
:CODE '<up to 8 char. string>'	Send calibration code. (Default KI002750.)
:CARD1	Path to calibrate card in slot 1.
:INITiate	Initiate card calibration.
:RCOunt	Reset card calibration count to 0.
:DATE?	Request card cal. date.
:SAVE	Save cal constants to card EEPROM.
:LOCK	Lock out calibration.
:LOCK?	Request cal lock state. (0 = locked, 1 = unlocked.)
:STEP0 <NRf>	Temperature sensor cold calibration (<NRf> = temperature, °C).
:CARD	Path to request calibration information from card in slots 1 to 5.
:COUNt? <NRf>	Request number of times card in slot <NRf> (1 to 5) has been calibrated.
:DATE? <NRf>	Request card <NRf> (1 to 5) calibration date.
:REFTEMP? <NRf>	Returns card ground voltage followed by actual (calibrated) temp sensor readings, comma delimited for card in slot <NRf> (1 to 5).

:CODE

(:CALibration:PROTected:CODE)

Purpose To program the calibration code or password so that you can perform the Model 7700 calibration procedures.

Format `:cal:prot:code '<char_string>'`

Parameters Up to an 8-character string including letters and numbers.

Description The `:CODE` command enables the Model 2750 calibration procedures when performing these procedures over the bus. This command must be sent to the unit before sending any other Model 7700 calibration command. The default calibration code is KI002750.

NOTE The `:CODE` command should be sent only once before performing calibration. Do not send `:CODE` before each calibration step.

The code parameter must be enclosed in single quotes.

Example `:CAL:PROT:CODE 'KI002750'` Send default code of KI002750.

:COUNt?

(:CALibration:PROTected:CARD:COUNt? <NRf>)

Purpose To determine how many times a Model 7700 has been calibrated.

Format `:cal:prot:card:coun? <NRf> (<NRf> = 1 to 5)`

Response <n> Calibration count.

Description The `:CARD:COUNt?` command allows you to determine how many times a Model 7700 in Slot 1 through Slot 5 (<NRf> = 1 to 5) respectively has been calibrated.

NOTE Use the `:COUNt?` command to help you monitor for unauthorized calibration procedures.

Example `:CAL:PROT:CARD:COUN? 1` Request card 1 calibration count.

:DATE?

(:CALibration:PROTected:CARD:DATE? <NRf>)

Purpose To request the Model 7700 calibration date.

Format `:cal:prot:card:date? <NRf>` (<NRf> = 1 to 5)

Response <year>, <month>, <day>

Description The `CARD:DATE?` query allows you to read back the calibration date from a Model 7700 in Slot 1 through Slot 5 respectively (<NRf> = 1 to 5).

NOTE The card calibration date is automatically set to the Model 2750 real time clock date when the card is calibrated.

Example `:CAL:PROT:CARD:DATE? 1` Request card 1 cal date.

:INIT

(:CALibration:PROTected:CARD1:INITiate)

Purpose To initiate Model 7700 calibration procedures.

Format `:cal:prot:card1:init`

Parameters None

Description The `:INIT` command enables Model 7700 calibration when performing these procedures over the bus. This command must be sent to the unit after sending the `:CODE` command, but before performing Model 7700 calibration.

Example `:CAL:PROT:CARD1:INIT` Initiate 7700 calibration.

:LOCK

(:CALibration:PROTected:CARD1:LOCK)

Purpose To lock out Model 7700 calibration.

Format `:cal:prot:card1:lock`

Parameters None

Description The `:LOCK` command allows you to lock out Model 7700 calibration after completing the procedure. Thus, `:LOCK` performs the opposite of enabling calibration with the `:CODE` command.

Example `:CAL:PROT:CARD1:LOCK` Lock out card 1 calibration.

:LOCK?

(:CALibration:PROTected:CARD1:LOCK?)

Purpose To read Model 7700 calibration lock status.

Format `:cal:prot:card1:lock?`

Response 0 Calibration locked.
1 Calibration unlocked.

Description The `:LOCK?` query requests status from the Model 2750 on Model 7700 calibration locked/unlocked state. Calibration must be enabled sending the `:CODE` command before calibration can be performed.

Example `:CAL:PROT:CARD1:LOCK?` Request card 1 cal lock state.

:RCOunt

(:CALibration:PROTected:CARD1:RCOunt)

Purpose To reset card calibration count to 0.

Format `:cal:prot:card1:rco`

Parameters None

Description The `:RCOunt` command resets the card calibration count reported by `:COUNt?` to 0.

Example `:CAL:PROT:CARD1:RCO` Rest card calibration count.

:REFTEMP?

(:CALibration:PROTected:CARD:REFTEMP? <NRf>)

Purpose To request the Model 7700 reference calibration temperature.

Format `:cal:prot:card:reftemp? <NRf>` (<NRf> = 1 to 5)

Response <ground_voltage>,<ref_temp>

Description The `CARD:REFTEMP?` query allows you to read back the ground voltage and calibration reference temperature from a Model 7700 in Slot 1 through Slot 5 respectively (<NRf> = 1 to 5). The two response values are delimited by a comma.

Example `:CAL:PROT:CARD:REFTEMP? 1` Request card 1 temp.

:SAVE

(:CALibration:PROTected:CARD1:SAVE)

Purpose To save calibration constants in card EEROM after the calibration procedure.

Format `:cal:prot:card1:save`

Parameters None

Description The `:SAVE` command stores calculated calibration constants derived during Model 7700 calibration in card EEROM. (EEROM is non-volatile memory.) Calibration constants will be retained indefinitely once saved. Generally, `:SAVE` is sent after all other calibration steps (except for `:LOCK`).

NOTE Card calibration will be only temporary unless the `:SAVE` command is sent to permanently store calibration constants.

Example `:CAL:PROT:CARD1:SAVE` Save card calibration constants.

:STEP0

(:CALibration:PROTected:CARD1:STEP0)

Purpose To perform Model 7700 calibration.

Format `:cal:prot:card1:step0 <temp>`

Parameters <temp> = Cold calibration temperature (°C)

Description `:STEP0` performs temperature sensor calibration of the Model 7700. The card must be allowed to cool down to ambient temperature before calibration, and the cold temperature of the card must be measured and sent as the <temp> parameter during calibration.

NOTE Before calibrating the Model 7700, make sure that power has been removed from the card for at least two hours to allow card circuitry to cool down. After turning on the power during the calibration procedure, complete the procedure as quickly as possible to minimize card heating that could affect calibration accuracy.

Example `:CAL:PROT:CARD1:STEP0 23` Perform 7700 calibration.

Remote error reporting

Methods to detect and determine the nature of calibration errors are discussed in the following paragraphs.

Error summary

Table B-5 summarizes Model 2750 calibration errors, including error numbers and error messages.

NOTE Error numbers and error messages are separated by commas. All calibration errors will set Bit 3 in the Standard Event Register. See the Model 2750 User's Manual.

Table B-5
Calibration errors

Error Number	Error Message
+400	“10 vdc zero error”
+401	“100 vdc zero error”
+402	“10 vdc full scale error”
+403	“-10 vdc full scale error”
+404	“100 vdc full scale error”
+405	“-100 vdc full scale error”
+406	“100 2-w zero error”
+407	“10k 2-w zero error”
+408	“100k 2-w zero error”
+409	“10M 2-w zero error”
+410	“10M 2-w full scale error”
+411	“10M 2-w open error”
+412	“100 4-w zero error”
+413	“10k 4-w zero error”
+414	“100k 4-w zero error”
+415	“10M 4-w sense lo zero error”
+416	“100 4-w full scale error”

Table B-5 (continued)
Calibration errors

Error Number	Error Message
+417	“10k 4-w full scale error”
+418	“100k 4-w full scale error”
+419	“1M 4-w full scale error”
+420	“10M 4-w full scale error”
+421	“10m adc zero error”
+422	“100m adc zero error”
+423	“10m adc full scale error”
+424	“100m adc full scale error”
+425	“1 adc full scale error”
+426	“10 4-w zero error”
+427	“1k 4-w zero error”
+428	“10 2-w zero error”
+429	“10k 4-w ocomp Ioff full scale error”
+430	“10k 4-w ocomp Ion full scale error”
+438	“Date of calibration not set”
+439	“Next date of calibration not set”
+450	“100m vac dac error”
+451	“1 vac dac error”
+452	“10 vac dac error”
+453	“100 vac dac error”
+454	“100m vac zero error”
+455	“100m vac full scale error”
+456	“1 vac zero error”
+457	“1 vac full scale error”
+458	“1 vac noise error”
+450	“10 vac zero error”
+460	“10 vac full scale error”

Table B-5 (continued)
Calibration errors

Error Number	Error Message
+461	“10 vac noise error”
+462	“100 vac zero error”
+463	“100 vac full scale error”
+464	“750 vac zero error”
+465	“750 vac full scale error”
+466	“750 vac noise error”
+467	“Post filter offset error”
+468	“1 aac zero error”
+469	“1 aac full scale error”
+470	“3 aac zero error”
+471	“3 aac full scale error”
+472	“Input time constant error”
+473	“Frequency gain error”
+474	“100 Ohm Ioff Ocomp FS error”
+475	“10K Ohm Ioff Ocomp FS error”
+476	“Temperature Cold Cal error” *
+477	“Analog output zero error”
+478	“Analog output pos. gain error”
+479	“Analog output neg. gain error”
+480	“1k 4-w dckt Ioff zero error”
+481	“1k 4-w dckt Ion zero error”
+482	“1k 4-w dckt Ioff full scale error”
+483	“1k 4-w dckt Ion full scale error”
+484	“100 4-w dckt Ioff zero error”
+485	“100 4-w dckt Ion zero error”
+486	“100 4-w ocomp Ion zero error”
+487	“100 4-w ocomp Ion full scale error”

Table B-5 (continued)
Calibration errors

Error Number	Error Message
+488	“100 4-w dckt Ioff full scale error”
+489	“100 4-w dckt Ion full scale error”
+490	“10 4-w dckt Ioff zero error”
+491	“10 4-w dckt Ion zero error”
+492	“10 4-w dckt full scale error”
+493	“10 4-w full scale error”
+494	“10 4-w ocomp Ion zero error”
+495	“10 4-w ocomp Ion full scale error”
+496	“1 4-w dckt Ioff zero error”
+497	“1 4-w dckt Ion zero error”
+498	“1 4-w dckt Ion full scale error”
+500	“Calibration data invalid”
+513	“AC calibration data lost”
+514	“DC calibration data lost”
+515	“Calibration dates lost”
+518	“Card calibration data lost” *
+519	“Card calibration dates lost” *
+610	“Questionable calibration”

*Model 7700 card only.

Error queue

As with other Model 2750 errors, any calibration error will be reported in the bus error queue. You can read this queue by using the :SYST:ERR? query. The Model 2750 will respond with the appropriate error number and message, as summarized in Table B-5.

Status byte EAV (Error Available) bit

Whenever an error is available in the error queue, the EAV (Error Available) bit (bit 2) of the status byte will be set. Use the *STB? query or serial polling to obtain the status byte, then test bit 2 to see if it is set. If the EAV bit is set, an error has occurred, and you can use the :SYST:ERR? query to read the error and at the same time clear the EAV bit in the status byte. Bit 3 of the Standard Event Register will also be set by a calibration error.

Generating an SRQ on error

To program the instrument to generate an IEEE-488 bus SRQ when an error occurs, send the following command: *SRE 4. This command will enable SRQ when the EAV bit is set. You can then read the status byte and error queue as outlined above to check for errors, and to determine the exact nature of the error.

Detecting calibration step completion

When sending remote calibration commands, you must wait until the instrument completes the current operation before sending a command. You can use either *OPC? or *OPC to help determine when each calibration step is completed.

Using the *OPC? query

With the *OPC? (operation complete) query, the instrument will place an ASCII 1 in the output queue when it has completed each step. To determine when the OPC response is ready, do the following:

1. Repeatedly test the MAV (Message Available) bit (bit 4) in the status byte and, wait until it is set. (You can request the status byte by using the *STB? query or by serial polling.)
2. When MAV is set, a message is available in the output queue, and you can read the output queue and test for an ASCII 1.
3. After reading the output queue, repeatedly test MAV again until it clears. At this point, the calibration step is completed.

Using the *OPC command

The *OPC (operation complete) command can also be used to detect the completion of each calibration step. To use *OPC to detect the end of each calibration step, you must do the following:

1. Enable operation complete by sending *ESE 1. This command sets the OPC (operation complete bit) in the standard event enable register, allowing operation complete status from the standard event status register to set the ESB (event summary bit) in the status byte when operation complete is detected.
2. Send the *OPC command immediately following each calibration command. For example:

   :CAL:PROT:DC:STEP1;*OPC
3. Note that you must include the semicolon (;) to separate the two commands, and that the *OPC command must appear on the same line as the calibration command.
4. After sending a calibration command, repeatedly test the ESB (Event Summary) bit (bit 5) in the status byte until it is set. (Use either the *STB? query or serial polling to request the status byte.)
5. Once operation complete has been detected, clear OPC status using one of two methods: (1) Use the *ESR? query, then read the response to clear the standard event status register, or (2) send the *CLS command to clear the status registers. Note that sending *CLS will also clear the error queue and operation complete status.

Generating an SRQ on calibration complete

An IEEE-488 bus SRQ (service request) can be used to detect operation complete instead of repeatedly polling the Model 2750. To use this method, send both *ESE 1 and *SRE 32 to the instrument, then include the *OPC command at the end of each calibration command line, as covered above. Refer to your controller’s documentation for information on detecting and servicing SRQs.

C
Calibration Program

Introduction

This appendix includes a calibration program written in BASIC to help you calibrate the Model 2750. Refer to Section 2 for more details on calibration procedures, equipment, and connections.

Computer hardware requirements

The following computer hardware is required to run the calibration program:

- IBM PC, AT, or compatible computer.
- Keithley KPC-488.2, KPS-488.2, or KPC-488.2AT, or CEC PC-488 IEEE-488 interface for the computer.
- Two shielded IEEE-488 connecting cables (Keithley Model 7007).

Software requirements

In order to use the calibration program, you will need the following software:

- Microsoft QBasic (supplied with MS-DOS 5.0 or later).
- MS-DOS version 5.0 or later.
- HP-style Universal Language Driver, CECHP.EXE (supplied with Keithley and CEC interface cards listed above).

Calibration equipment

The following calibration equipment is required:

- Fluke 5700A Calibrator.
- Keithley Model 8610 Calibration Short.
- Double banana plug to BNC cables.

See Section 2 for detailed equipment information, and refer to these figures for connections:

- Low-thermal short connections: Figure 2-1.
- DC volts and ohms connections: Figure 2-2.
- DC amps and AC amps connections: Figure 2-3.
- AC volts connections: Figure 2-4.

General program instructions

1. With the power off, connect the Model 2750 and the calibrator to the IEEE-488 interface of the computer. Be sure to use shielded IEEE-488 cables for bus connections.
2. Turn on the computer, Model 2750, and calibrator. Allow the Model 2750 and the calibrator to warm up for at least one hour before performing calibration.
3. Make sure the Model 2750 is set for a primary address of 16. (Use the front panel GPIB key to check or change the address.)
4. Make sure the calibrator primary address is at its factory default setting of 4.
5. Make sure that the computer bus driver software (CECHP.EXE) is properly initialized.
6. Enter the QBasic editor, and type in the program below. Check thoroughly for errors, then save it using a convenient filename.

NOTE *The program assumes a default calibration code of KI002750. If the calibration code has been changed, modify the :CAL:PROT:CODE parameter accordingly.*

7. Run the program, and follow the prompts on the screen to perform calibration.

Figure C-1
Model 2750 calibration program

```
' Model 2750 calibration program.
' Rev. 1.0, 3/1/2001
OPEN "IEEE" FOR OUTPUT AS #1            ' Open IEEE-488 output path.
OPEN "IEEE" FOR INPUT AS #2             ' Open IEEE-488 input path.
PRINT #1, "INTERM CRLF"                 ' Set input terminator.
PRINT #1, "OUTTERM LF"                  ' Set output terminator.
PRINT #1, "REMOTE 4 16"                 ' Put 2750, 5700A in remote.
PRINT #1, "CLEAR"                       ' Send DCL.
PRINT #1, "OUTPUT 16;:SYST:PRES;*CLS"   ' Initialize 2750.
PRINT #1, "OUTPUT 16;*ESE 1;*SRE 32"    ' Enable OPC and SRQ
PRINT #1, "OUTPUT 4;*RST;*CLS;STBY"     ' Reset 5700A calibrator.
PRINT #1, "OUTPUT 4;CUR_POST NORMAL"    ' Normal current output.
C$ = ":CAL:PROT:"                       ' 2750 partial command header.
'
CLS                                     ' Clear CRT.
PRINT "Model 2750 Multimeter Comprehensive Calibration Program"
PRINT #1, "OUTPUT 16;:CAL:PROT:CODE 'KI002750'"    ' Send KI002750 cal code.
PRINT #1, "OUTPUT 16;:CAL:PROT:INIT"    ' Initiate calibration.
GOSUB ErrCheck
RESTORE CmdList
'
FOR I = 1 TO 25                         ' Loop for all cal points.
READ Msg$, Cmd$                         ' Read message, cal strings.
```

```
SELECT CASE I                           ' Select cal sequence.
        CASE 1, 2
              PRINT Msg$
              GOSUB KeyCheck
        CASE 3
              PRINT "Connect calibrator to INPUT and SENSE jacks."
              PRINT "Wait 3 minutes."
              GOSUB KeyCheck
              PRINT #1, "OUTPUT 4;EXTSENSE OFF"
              PRINT #1, "OUTPUT 4;"; Msg$
              PRINT #1, "OUTPUT 4;OPER"
        CASE 4, 5, 11, 12, 14 TO 22, 24, 25
              PRINT #1, "OUTPUT 4;"; Msg$
              PRINT #1, "OUTPUT 4;OPER"
        CASE 6 TO 9
              PRINT #1, "OUTPUT 4;"; Msg$
              PRINT #1, "OUTPUT 4;EXTSENSE ON"
              PRINT #1, "OUTPUT 4;OPER"
              PRINT #1, "OUTPUT 4;OUT?"
              PRINT #1, "ENTER 4"
              INPUT #2, R, R$, s
              Cmd$ = Cmd$ + " " + STR$(R)
        CASE 10, 13, 23
              J$ = "AMPS"
              IF I = 13 THEN J$ = "INPUT HI"
              PRINT #1, "OUTPUT 4;STBY"
               PRINT "Connect calibrator to "; J$; " and INPUT LO jacks."
               GOSUB KeyCheck
               PRINT #1, "OUTPUT 4;"; Msg$
               PRINT #1, "OUTPUT 4;OPER"
END SELECT
IF I > 2 THEN GOSUB Settle
PRINT #1, "OUTPUT 16;"; C$; Cmd$; ";*OPC" ' Send cal command to 2750.
GOSUB CalEnd                            ' Wait until cal step ends.
GOSUB ErrCheck                          ' Check for cal error.
NEXT I
'
PRINT #1, "OUTPUT 4;STBY"
LINE INPUT "Enter calibration date (yyyy,mm,dd): "; D$
PRINT #1, "OUTPUT 16;:CAL:PROT:DATE"; D$
GOSUB ErrCheck
LINE INPUT "Enter calibration due date (yyyy,mm,dd): "; D$
PRINT #1, "OUTPUT 16;:CAL:PROT:NDUE"; D$
GOSUB ErrCheck
PRINT #1, "OUTPUT 16;:CAL:PROT:SAVE"    ' Save calibration constants.
GOSUB ErrCheck
PRINT #1, "OUTPUT 16;:CAL:PROT:LOCK"    ' Lock out calibration.
PRINT "Calibration completed."
PRINT #1, "OUTPUT 16;:SYST:PRES"
END
'
KeyCheck:                                 ' Check for key press routine.
WHILE INKEY$ <> "": WEND                  ' Flush keyboard buffer.
PRINT : PRINT "Press any key to continue (ESC to abort program)."
```

```
DO: I$ = INKEY$: LOOP WHILE I$ = ""
IF I$ = CHR$(27) THEN GOTO EndProg        ' Abort if ESC is pressed.
RETURN
'
CalEnd:                                   ' Check for cal step completion.
PRINT "Performing calibration step #"; I
DO: PRINT #1, "SRQ?"                      ' Request SRQ status.
INPUT #2, s                               ' Input SRQ status byte.
LOOP UNTIL s                              ' Wait for operation complete.
PRINT #1, "OUTPUT 16;*ESR?"               ' Clear OPC.
PRINT #1, "ENTER 16"
INPUT #2, s
PRINT #1, "SPOLL 16"                      ' Clear SRQ.
INPUT #2, s
RETURN
'
ErrCheck:                                 ' Error check routine.
PRINT #1, "OUTPUT 16;:SYST:ERR?"          ' Query error queue.
PRINT #1, "ENTER 16"
INPUT #2, E, Err$
IF E <> 0 THEN PRINT Err$: GOTO ErrCheck  ' Display error.
RETURN
'
Settle:                                   ' Calibrator settling routine.
DO: PRINT #1, "OUTPUT 4;ISR?"             ' Query status register.
PRINT #1, "ENTER 4"
INPUT #2, s
LOOP UNTIL (s AND &H1000)                 ' Test settle bit.
RETURN
'
EndProg:                                  ' Close files, end program.
BEEP: PRINT "Calibration aborted."
PRINT #1, "OUTPUT 4;STBY"
PRINT #1, "OUTPUT 16;:SYST:PRES"
PRINT #1, "LOCAL 4 16"
CLOSE
END
'
CmdList:
DATA "Connect low-thermal short to inputs, wait 3 minutes.","DC:STEP1"
DATA "Disconnect low-thermal short from inputs.","DC:STEP2"
DATA "OUT 10 V,0 HZ","DC:STEP3 10"
DATA "OUT -10 V","DC:STEP4 -10"
DATA "OUT 100 V","DC:STEP5 100"
DATA "OUT 100 OHM","DC:STEP6"
DATA "OUT 10 KOHM","DC:STEP7"
DATA "OUT 100 KOHM","DC:STEP8"
DATA "OUT 1 MOHM","DC:STEP9"
DATA "OUT 10 MA","DC:STEP10 10E-3"
DATA "OUT 100 MA","DC:STEP11 100E-3"
DATA "OUT 1A","DC:STEP12 1"
DATA "OUT 10 MV,1 KHZ","AC:STEP1"
DATA "OUT 100 MV,1 KHZ","AC:STEP2"
DATA "OUT 100 MV,50 KHZ","AC:STEP3"
```

```
DATA "OUT 1 V,1 KHZ","AC:STEP4"
DATA "OUT 1 V,50 KHZ","AC:STEP5"
DATA "OUT 10 V,1 KHZ","AC:STEP6"
DATA "OUT 10 V,50 KHZ","AC:STEP7"
DATA "OUT 100 V,1 KHZ","AC:STEP8"
DATA "OUT 100 V,50 KHZ","AC:STEP9"
DATA "OUT 700 V,1 KHZ","AC:STEP10"
DATA "OUT 100 MA,1 KHZ","AC:STEP11"
DATA "OUT 1 A,1 KHZ","AC:STEP12"
DATA "OUT 2 A,1 KHZ","AC:STEP13"
```

Index

AC
STEP B-14, B-15
CODE B-4, B-17
COUNt? B-4, B-17
DATE B-7
DATE? B-18, B-19
DC
STEP0 B-15
INIT B-5, B-18
LOCK B-5, B-18
LOCK? B-6, B-19
NDUE B-7
RCOunt B-19
SAVE B-6, B-20
STEP0 B-20
STEP1 B-8
STEP10 B-11
STEP11 B-12
STEP12 B-12
STEP2 B-9
STEP3 B-9
STEP4 B-9
STEP5 B-10
STEP6 B-10
STEP7 B-10
STEP8 B-11
STEP9 B-11

Symbols

*OPC command B-26
*OPC? query B-25

A

AC calibration commands B-13
AC characteristics accuracy A-2
AC current A-4, A-5
verifying, Model 2700 1-13
AC voltage A-4, A-5
verifying, Model 2700 1-10
verifying, Model 7700 1-22
ACA signal switching 4-21
Accuracy calculations A-2
ACV and ACA signal multiplexing and gain 4-22
ACV and FREQ signal switching 4-17
AMPS input 4-11
Analog circuitry 4-9
block diagram 4-10
Analog signal switching states 4-16
Assembly drawings 5-3

B

battery
replacement 3-6

C

Calibration 2-1
calibration
aborting 2-6
AC current 2-13
AC voltage 2-12
code 2-4
comprehensive 2-5
considerations 2-3
cycle 2-5
DC current 2-11
DC volts 2-8
front panel 2-6
front panel short and open 2-7
Model 7700 2-24
Model 7700 and 7706 2-23
preparing the Model 2700 2-6
recommended equipment 2-5
Remote Model 7700 2-25
resistance 2-10
setting dates and saving 2-13
step completion B-25
calibration code
front panel 2-4
remote 2-4
calibration commands
AC B-13
DC B-8
manufacturing B-15
miscellaneous B-4
Model 7700 and 7706 B-16
Calibration Program C-1
Calibration equipment C-2
Computer hardware requirements C-2
General instructions C-3
Software requirements C-2
calibration program
Model 2700 C-3
Calibration Reference B-1
Card cage removal 5-5
Case cover removal 5-4
Command summary B-2
Component layouts 6-3

Connections
AC volts calibration 2-12
DC and AC amps calibration 2-11
DC volts and ohms calibration 2-8
Input terminal wire 5-6
manufacturing calibration 2-22
Model 2700 AC current verification 1-13
Model 2700 AC volts verification 1-10
Model 2700 DC current verification 1-12
Model 2700 DC volts verification 1-9
Model 2700 frequency verification 1-20
Model 2700 resistance verification (100MW range) 1-15
Model 2700 resistance verification (100W to 10MW ranges) 1-14, 1-17, 1-29
Model 7700 AC current verification 1-25
Model 7700 AC volts verification 1-22
Model 7700 DC current verification 1-24
Model 7700 DC volts verification 1-21
Model 7700 frequency verification 1-34
Model 7700 ratio and average verification 1-35
Model 7700 resistance verification (100MW range) 1-27
Model 7700 resistance verification (100W to 10MW ranges) 1-27
Model 7700 thermocouple temperature verification 1-31
Power module wire 5-7
connections
low-thermal short 2-7

D

dB characteristics accuracy A-3
dBm characteristics accuracy A-3
DC calibration commands B-8
DC characteristics accuracy A-2
DC current A-4, A-5
verifying, Model 2700 1-11
verifying, Model 7700 1-24
DC voltage A-4, A-5
Verifying, Model 2700 1-8
verifying, Model 7700 1-21
DCA signal multiplexing and gain 4-22
DCV signal multiplexing and gain 4-22
DCV signal switching 4-16
derating factors
additional A-4
Digital circuitry 4-7
block diagram 4-6
Digital circuitry checks 4-15
Digital I/O 4-8
Disassembly 5-1
Disassembly procedures 5-4
DISP test 4-3
Display 4-7
Display board 4-6
Display board checks 4-14

E

Environmental conditions 1-3, 2-2
Error queue B-24
Error summary B-21
Extender board connections 2-24

F

factory defaults
restoring 1-6
Factory service 6-2
frequency
Verifying, Model 2700 1-20
verifying, Model 7700 1-34
Front panel
disassembly 5-5
tests 4-3
Front panel Model 7700 calibration 2-24
Front terminal AMPS fuse 3-4
fuse
front terminal, replacing 3-4
Power line 3-3
fuses
plug-in module, replacing 3-5

G

Generating an SRQ on calibration complete B-26
Generating an SRQ on error B-25

H

Handling and cleaning 5-2
Handling PC boards 5-2

I

IEEE-488 interface 4-8
INPUT HI 4-11
Input terminal wire colors 5-6
Instrument reassembly 5-6
Introduction
Calibration 2-2
Calibration Program C-2
Calibration Reference B-2

Disassembly 5-2
Performance Verification 1-2
Replaceable Parts 6-2
Routine Maintenance 3-2
troubleshooting 4-2

K

Key matrix 4-7
KEY test 4-3

L

limits
ACI, Model 2700 1-13
DCI, Model 2700 1-12
Plug-in module ACI, Model 7700 1-26
Plug-in module DCI, Model 7700 1-25
plug-in module resistance verification, Model 7700 1-28
resistance verification, Model 2700 1-16, 1-18, 1-30
line fuse
replacing 3-2
Line power 1-3, 2-2
Line sync 4-8
line voltage
setting 3-2

M

Maintenance,Routine 3-1
Manufacturing calibration 2-20
Extender board preparation 2-20
front panel 2-21
Recommended test equipment 2-20
remote 2-22
Unlocking manufacturing calibration 2-21
measurement accuracy
optimizing A-4
measurement speed
optimizing A-5
Measuring function generator signal amplitude 2-21
Memory circuits 4-8
Microcontroller 4-7
Microprocessor 4-7
Model 7700 amps fuse 3-5
Model 7700 and 7706 calibration commands B-16
Module slot control 4-8
Motherboard removal 5-4
Multiplexer and A/D converter 4-12

N

No comm link error 4-24

O

operation
principles 4-4
Ordering information 6-2

P

Parts lists 6-2
Performance Verification 1-1
power components
removing 5-5
Power module removal 5-6
Power module wire colors 5-7
Power supply 4-4
block diagram 4-4
Power supply checks 4-14
Power supply components 4-5
Power transformer removal 5-5
Power-on self-test 4-3

R

ratio and average
verifying, Model 7700 1-35
reading limit
ACV, Model 2700 1-11
calculating resistance 1-5
calculation, example 1-5
DCV, Model 2700 1-9
four-wire RTD temperature verification, Model 2700 1-19
Model 7700 thermocouple temperature verification 1-32
Plug-in module ACV, Model 7700 1-23
Plug-in module DCV, Model 7700 1-22
Plug-in module four-wire RTD temperature verification, Model 7700 1-33
thermocouple temperature verification, Model 2700 1-19
Recommended test equipment 1-4, 2-23
Remote calibration 2-14
AC current 2-19
AC voltage 2-18
command summary B-2
DC current 2-17
DC volts 2-15
Locking out calibration 2-19
preparing the Model 2700 2-14

Programming calibration dates 2-19
resistance 2-16
Saving calibration constants 2-19
short and open 2-15
Remote error reporting B-21
Repair considerations 4-2
Replaceable Parts 6-1
Resetting relay closure count 3-9
resistance A-4, A-5
verifying, Model 2700 1-14, 1-16, 1-28
verifying, Model 7700 1-26
RS-232 interface 4-8

S

Scanner card signals 4-12
Signal switching 4-11
Solder repairs 5-2
Specifications A-1
Static sensitive devices 5-3
Status byte EAV (Error Available) bit B-25
Switching device locations 4-24

T

Temperature A-4, A-5
temperature
RTD, Model 2700 1-19
RTD, Model 7700 1-33
thermocouple, Model 2700 1-18
thermocouple, Model 7700 1-31
verifying, Model 2700 1-18
verifying, Model 7700 1-31
Trigger circuits 4-8
Troubleshooting 4-1

V

verification
Model 2700 1-8
Model 7700 1-20
Verification limits 1-5
Verification test
considerations 1-7
Model 2700 1-6
Model 7700 1-7
summary 1-6
verification test
procedures 1-6
Verification test requirements 1-3
verifying
AC current, Model 7700 1-25

W

W2 signal multiplexing and gain 4-23
W2 signal switching 4-18
W2/W4 reference switching 4-20, 4-21
W4 signal multiplexing and gain 4-23
W4 signal switching 4-19, 4-20
Warm-up period
calibration 2-2
Verification Procedures 1-3

Service Form

Model No. _____ **Serial No.** _____ **Date** _____

Name and Telephone No. _____

Company _____

List all control settings, describe problem and check boxes that apply to problem. _____

_____

_____

❑ Intermittent ❑ Analog output follows display ❑ Particular range or function bad; specify

_____

❑ IEEE failure ❑ Obvious problem on power-up ❑ Batteries and fuses are OK

❑ Front panel operational ❑ All ranges or functions are bad ❑ Checked all cables

Display or output (check one)

❑ Drifts ❑ Unable to zero ❑ Unstable

❑ Overload ❑ Will not read applied input

❑ Calibration only ❑ Certificate of calibration required ❑ Data required

(attach any additional sheets as necessary)

Show a block diagram of your measurement including all instruments connected (whether power is turned on or not). Also, describe signal source.

Where is the measurement being performed? (factory, controlled laboratory, out-of-doors, etc.) _____

_____

What power line voltage is used?_____ Ambient temperature?_____°F

Relative humidity? _____Other?_____

Any additional information. (If special modifications have been made by the user, please describe.)

_____

_____

Be sure to include your name and phone number on this service form.