2017

Revision level			Revision Record	Changed	Date	Approved	Date
Drawing	State	Part					
00.0	**DESIGN RELEASE**	-	SEE ECN# 015275	JMC	10/23/20	JPG	10/23/20

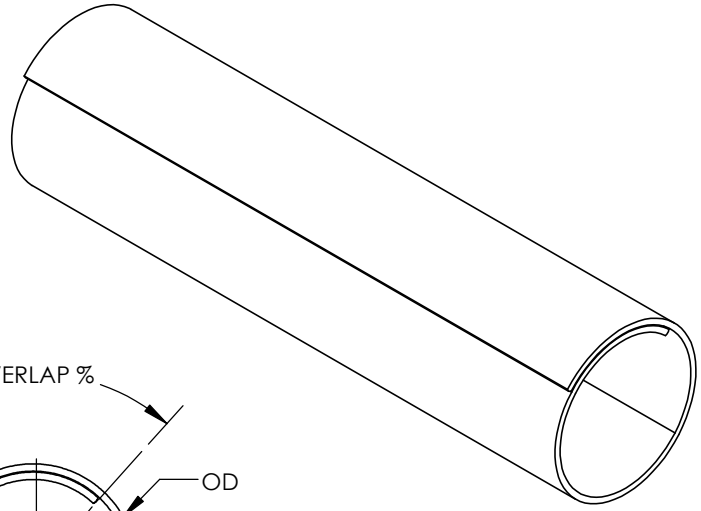

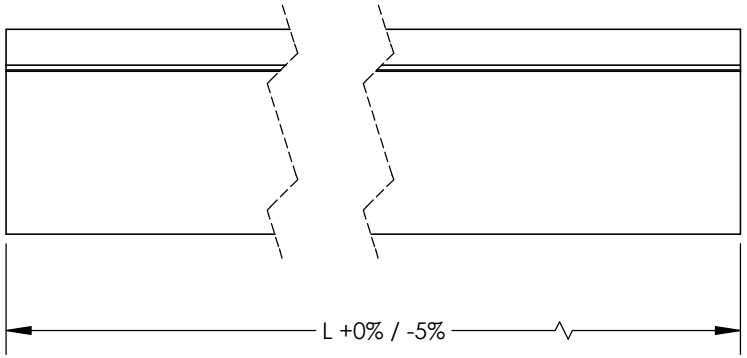

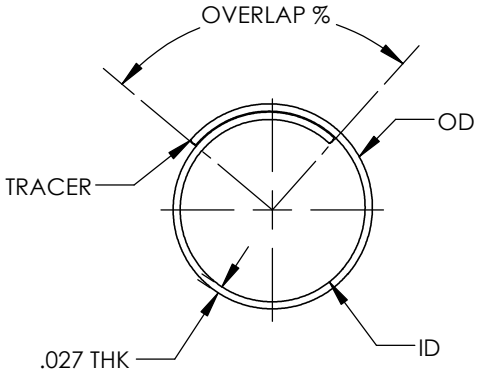

NOMINAL SIZE	GPN	TYPE	OD	ID	OVERLAP (%)	BULK L (FT)
3/16	19-1110	BSSWVFR316B	.242	.188	51	500
3/8	19-1111	BSSWVFR380B	.429	.375	41	250
1/2	19-1112	BSSWVFR120B	.554	.500	35	200
3/4	19-1113	BSSWVFR340B	.804	.750	28	150
1	19-1114	BSSWVFR100B	1.054	1.00	26	100
1 1/4	19-1115	BSSWVFR1140B	1.304	1.25	25	75
1 1/2	19-1116	BSSWVFR1120B	1.554	1.50	23	50

NOTES:
1. BLACK WITH WHITE TRACER

Material PET (POLYETH-ELENETEREPHTHALATE) FLAME RETARDANT	Units: **Inches**	The copyright of this drawing is reserved by HellermannTyton. It is issued on condition that it is not reproduced, copied, or disclosed to a third party, either wholly or in part, without the consent of HellermannTyton.	Drawn JMC 07/11/2019 Approved JPG 07/11/2019 **HellermannTyton** **North America** **Email: corp@htamericas.com** **Web: www.hellermann.tyton.com**	Article/Type-No CT TABLE Title BSSWVFR WOVEN SPLIT BRAIDED SLEEVING Drawing-No PRODUCTION : Phase **19-1110-001-CSU**	Scale 1:1 Project Number PRP 19-1119 Format AH Sheet 1/1	