SW

Revision level			Revision Record	Changed	Date	Approved	Date
Drawing	State	Part					
01.1	Design Release		SEE ECN# 015255	MHT	07/01/2019	CTF	07/01/2019

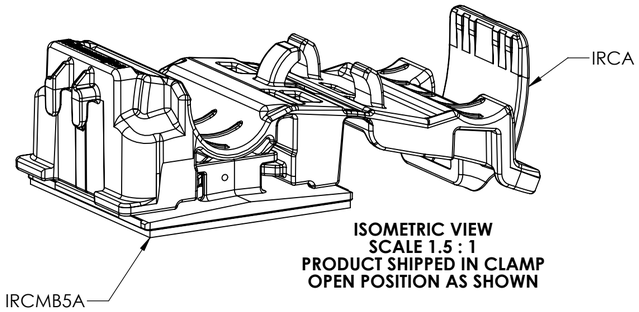

ISOMETRIC VIEW
SCALE 1.5 : 1
PRODUCT SHIPPED IN CLAMP
OPEN POSITION AS SHOWN

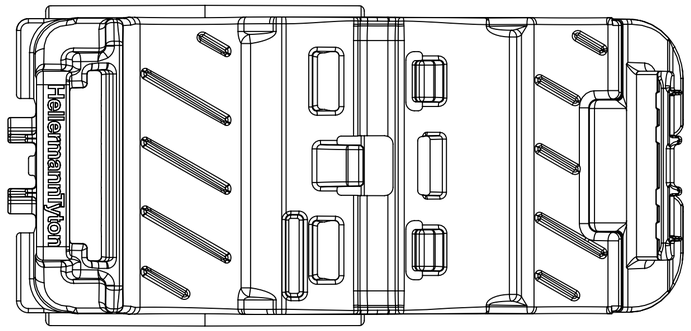

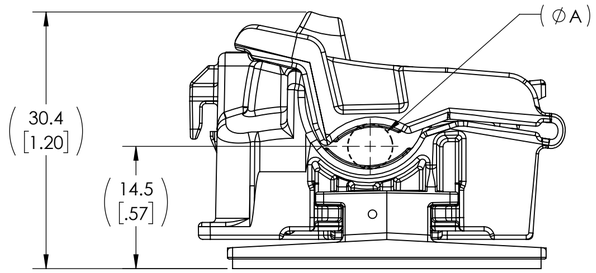

MINIMUM BUNDLE DIAMETER

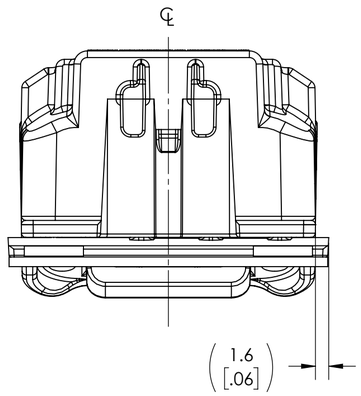

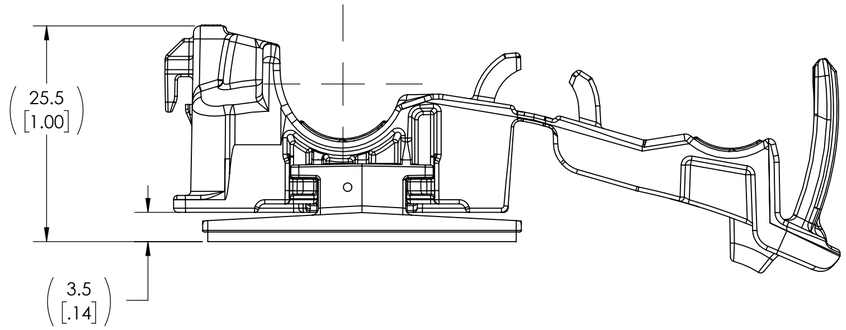

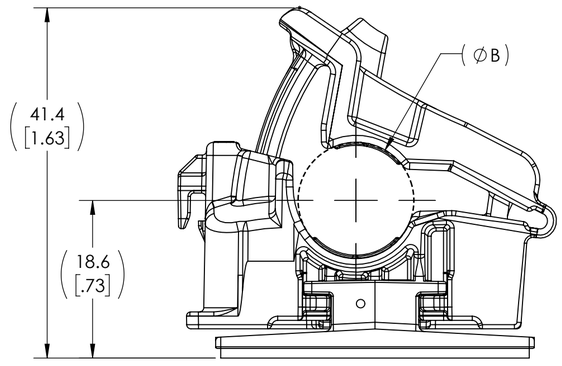

MAXIMUM BUNDLE DIAMETER

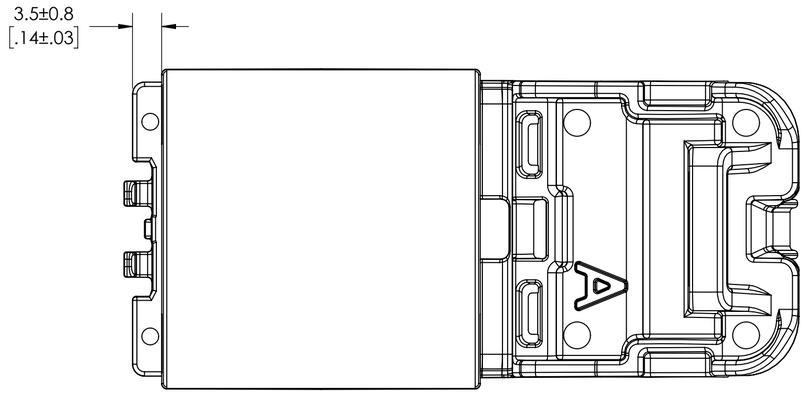

REFERENCE:

URAD5PX5011E ACRYLIC FOAM TAPE

GLOBAL PART DESCRIPTION	BUNDLE TYPES	(A) MINIMUM DIAMETER	(B) MAXIMUM DIAMETER	IRCA CLAMP			IRCMB5A CONNECTOR CLIP		
				DRAWING	MATERIAL	COLOR	DRAWING	MATERIAL	COLOR
IRCAMB5A-PA66HIRHSUV-BK	SOFT	6.2 [.24]	13.7 [.54]	16-1639-001-CSU	PA66HIRHSUV	BLACK	16-1645-023-CSU	PA66HIRHSUV	BLACK
	HARD	5.4 [.21]	12.9 [.51]						

Notes

Material

SEE CHART

Units: millimeters

Dimension without tolerances details to:

.XXX = ±.013
.XX = ±.13
.X = ±.3
None = ±.8
∠ = ±0.5°

Dimension Formatted mm/[in]

The copyright of this drawing is reserved by HellermannTyton. It is issued on condition that it is not reproduced, copied, or disclosed to a third party, either wholly or in part, without the consent of HellermannTyton.

Drawn	MHT	06/24/2019
Approved	CTF	06/24/2019

HellermannTyton
North America
Email: corp@htamericas.com
Web: www.hellermann.tyton.com

Article/Type-No: IRCAMB5A

Title: INLINE RATCHET P-CLAMP A WITH 38x38mm ADHESIVE MOUNT

Drawing-No: 19-0323-101-CSU

Production : Phase

Scale: 2:1

Project Number: PRP19-0323

Format: C

Sheet: 1/1