HAKKO

HAKKO DESOLDERING TOOL MODEL FM-2024

Iron holder with
sleep mode function

Instruction Manual

●

Thank you for purchasing the MODEL FM-2024 desoldering tool.
Please read this manual before operating the MODEL FM-2024.
Keep this manual readily accessible for reference.

●

⚠ CAUTION

- The MODEL FM-2024 cannot function by itself. It must be connected to the Desolder Control Box (DCB), which in turn connects to the soldering station of HAKKO FM-203.
- For detailed information on the HAKKO FM-203 soldering stations, refer to the instruction manual for the appropriate soldering station.

TABLE OF CONTENTS

1. PACKING LIST 1
2. SPECIFICATIONS 1
3. WARNINGS, CAUTIONS AND NOTES 2
4. PART NAMES 3
5. OPERATION 4
6. MAINTENANCE 10
7. TROUBLE SHOOTING GUIDE 14
8. PARTS LIST 17
9. WIRING DIAGRAM 19

1. PACKING LIST

Please check to make sure that all items listed below are included in the package.

Desolder control box (DCB) 1
Desoldering tool (Nozzle is not included) 1
Iron holder 1
Handle (for gun configuration) 1
Ceramic paper filter (10 pcs.) 1
Cleaning drill (for heating element) 1
Nozzle remover 1
Connecting cable 1
Instruction manual 1

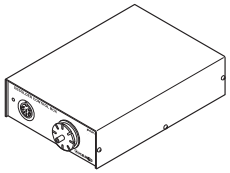

Desolder control box (DCB)

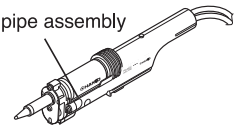

Desoldering tool
(Nozzle is not included)

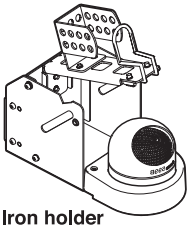

Iron holder

Handle (for gun configuration)

Cleaning drill (for heating element)

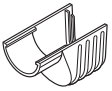

Nozzle remover

Ceramic paper filter
(10 pcs.)

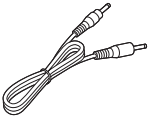

Connecting
cable

2. SPECIFICATIONS

Desolder control box

Power consumption	12 W
Output	24 V
Vacuum generator	Ejector type
Vacuum pressure (max.)	93 kPa (700 mmHg) (28 in. Hg)
Suction flow	20 ℓ/min*
Tip to ground potential	< 2 mV
Applied air pressure	490 kPa (5.0 kgf/cm^2) when in use (trigger or button is pressed)
Compressed air consumption	1.62 c.f.m. (46 ℓ/min.)
Dimensions	119 (W) × 45 (H) × 172 (D) mm (4.7 × 1.8 × 6.8 in.)
Weight	1.2 kg

* This suction flow is measured at the filter case suction port of Station.

■ Electrostatic Protection

This product includes such features as electrically conductive plastic parts and grounding of the handpiece and station as measures to protect the device to be soldered from the effects of static electricity. Be sure to observe the following instructions:

1. The handle and other plastic parts are not insulators, they are consuctors. When replacing parts or repairing, take sufficient care not to expose live electrical parts or damage insulation materials.
2. Be sure to ground the unit during use.

Desolder tool

Power consumption	70 W (24 V)
Temperature range	350 - 450°C (650 - 840°F)
Tip to ground potential	< 2 mV
Tip to ground resistance	< 2 Ω
Total length (w/o cord)	180 mm (7.1 in.)
Weight (w/o cord & hose)	65 g (0.14 lb.)
Cord	1.2 m (4ft)

NOTE:
* The temperatures were measured using the HAKKO FG-101 soldering tester.
* This product is protected against electrostatic discharge.
* Specifications and design are subject to change without notice.

中國RoHS: 產品中有毒有害物質或元素的名稱及含量

部件名稱	有毒有害物質或元素					
	鉛(Pb)	汞(Hg)	鎘(Cd)	六價鉻 (CrVI)	多溴聯苯 (PBB)	多溴二苯醚 (PBDE)
連接部	×	○	○	○	○	○
吸錫槍部	×	○	○	○	○	○
隔離器	×	○	○	○	○	○
插頭	×	○	○	○	○	○
保險絲套	×	○	○	○	○	○
電磁蓋	×	○	○	○	○	○
電路板	×	○	○	○	○	○

○： 表示該有毒有害物質在該部件所有均質材料中的含量均在SJ/T 11363-2006標準規定的限量要求以下。
×： 表示該有毒有害物質至少在該部件的某一均質材料中的含量超出SJ/T 11363-2006標準規定的限量要求。

3. WARNINGS, CAUTIONS AND NOTES

⚠ WARNING

In this instruction manual, “WARNING” and “CAUTION” are defined as follows.

⚠ **WARNING:** Misuse may potentially cause death of, or serious injury to the user.

⚠ **CAUTION :** Misuse may potentially cause injury to the user or physical damage to the objects involved.
For your safety, be sure to comply with these precautions.

Failure to do so may result in serious problems.

⚠ CAUTION

When the power is on, the nozzle temperature is between 350°C/650°F and 450°C/840°F. Since mishandling may lead to burns or fire, be sure to comply with the following precautions.

- Do not touch the metal parts near the nozzle, nearby plastic parts, or the spring iron holder.
- Do not use the product near flammable items.
- Advise other people in the work area that the unit can reach a very high temperature and should be considered potentially dangerous.
- Turn the power off while taking breaks and when finished using the unit.
- Before replacing parts or storing the unit, turn the power off and allow the unit to cool to room temperature.
- This appliance is not intended for use by persons (including children) with reduced physical, sensory or mental capabilities, or lack of experience and knowledge, unless they have been given supervision or instruction concerning use of the appliance by a person responsible for their safety.
- Children should be supervised to ensure that they do not play with the appliance.

To prevent damage to the unit and ensure a safe working environment, be sure to comply with the following precautions.

Use only filtered air. Adjust the pressure to 490 to 686 kPa (5.0 to 7.0 kgf/cm^2) while allowing air to flow by pulling the trigger.

- Do not use the unit for applications other than desoldering.
- Do not rap the desoldering tool against the work bench to shake off residual solder, or otherwise subject the iron to severe shocks.
- Do not modify the unit.
- Use only genuine HAKKO replacement parts.
- Do not wet the unit or use the unit when your hands are wet.
- When desoldering, ensure good ventilation for smoke.
- While using the unit, don’t do anything which may cause bodily harm or physical damage.

4. PART NAMES (Refer to p.17~18 for part nos.)

DCB <Front>

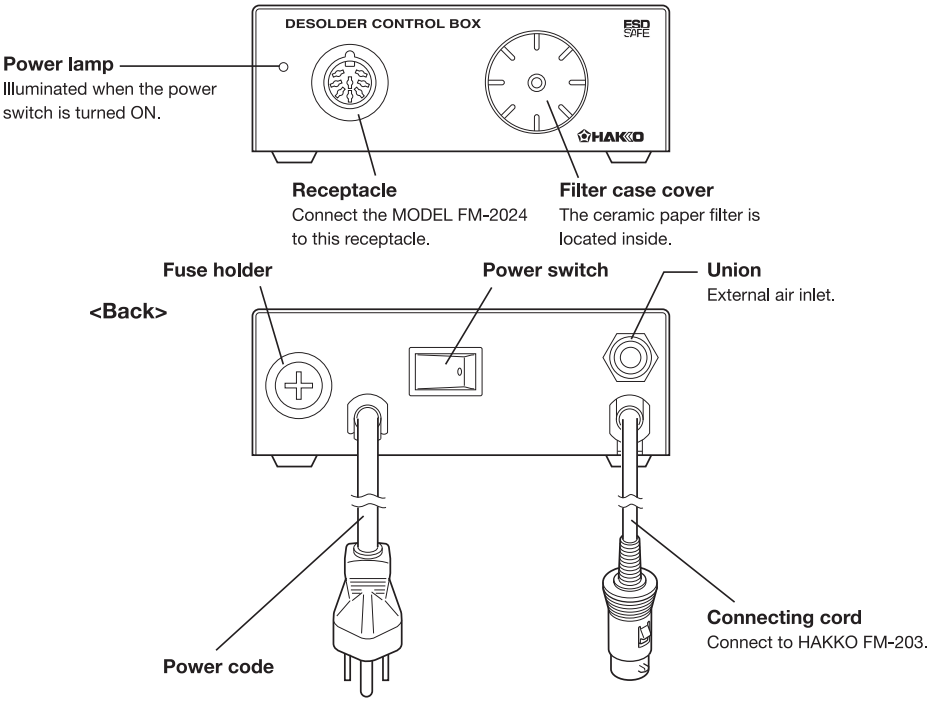

MODEL FM-2024

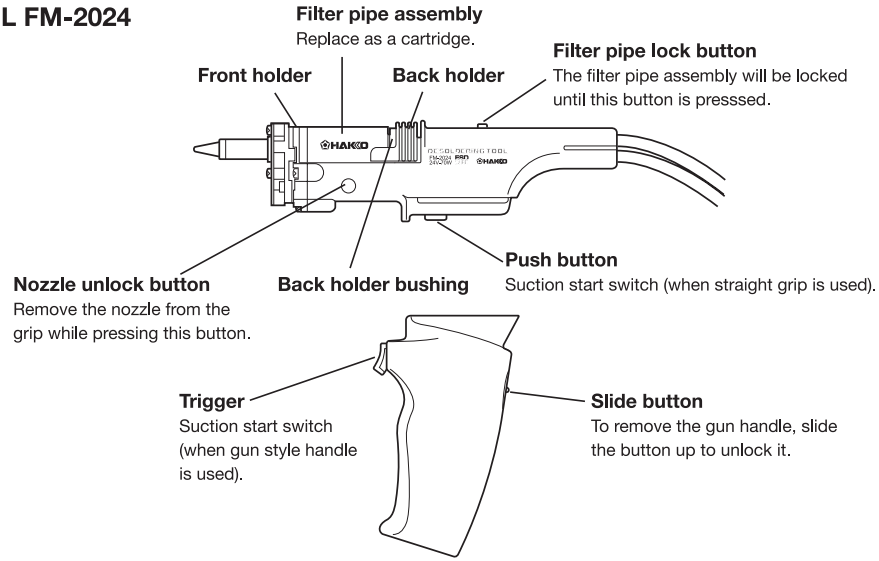

5. OPERATION

Assembling, connection and operation

● Assembling

1. Iron holder

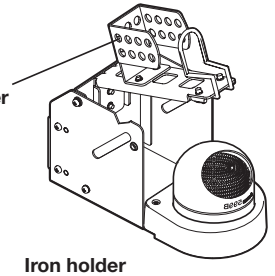

2. Connecting and replacing the filter pipe

Pull the back holder (A) until it locks, then insert the filter pipe assembly with the opening to the nozzle side. Ensure that the outer surface of the filter pipe assembly is even with the handle support. If the filter pipe assembly is tilted, a leak may occur.

To replace the filter pipe assembly, press back holder unlock button, pull the back holder to lock it, change the filter pipe assembly, then lock the filter pipe assembly.

Replace the filter pipe assembly in the cartridge.

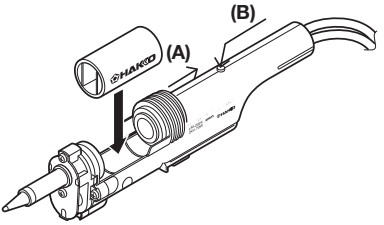

⚠CAUTION
The surface of the filter pipe assembly may be very hot.

3. Attaching and replacing the nozzle

Insert the grip fully into the nozzle cartridge as shown in the illustration. Once the nozzle cartridge is inserted, it is locked automatically.

To replace the nozzle cartridge, insert the nozzle remover into the flange of the nozzle cartridge and pull.

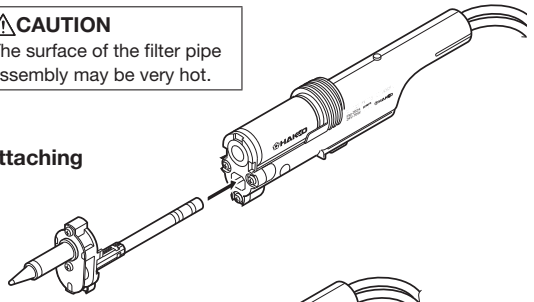

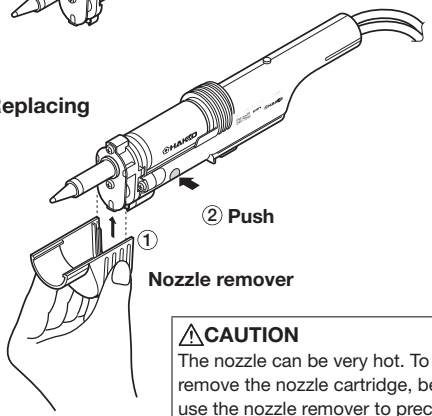

⚠CAUTION
The nozzle can be very hot. To attach or remove the nozzle cartridge, be sure to use the nozzle remover to preclude the possibility of breaking the grip or cartridge.

5. OPERATION

Press the nozzle unlock button (A) and remove the nozzle cartridge.

> ⚠**CAUTION**
> The nozzle may be very hot.

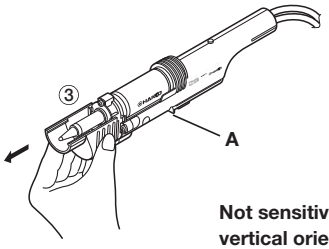

Not sensitive to vertical orientation

The nozzle remover may be left mounted on the end of the straight grip when not in use to prevent it from being misplaced.

● Connection

> ⚠**CAUTION**
> Be sure to unplug the cord by holding the plug.

● The HAKKO FM-203 detects when the iron is removed from the iron holder and sends this data to the station via the connecting cable. That data is then used for various functions.

> **NOTE:**
> The channel for connecting the connecting cable to the iron holder must be the same as the channel for connecting the iron set to the station.

> ⚠**CAUTION**
> Securely insert the connecting cable all the way to the station.

1. Connect the plug from the MODEL FM-2024 to the receptacle on the DCB, then connect the DCB to the soldering station as shown in the drawing.

> **NOTE:**
> When MODEL FM-2024 is connected to HAKKO FM-203, it could be connected to either D channel or S channel.

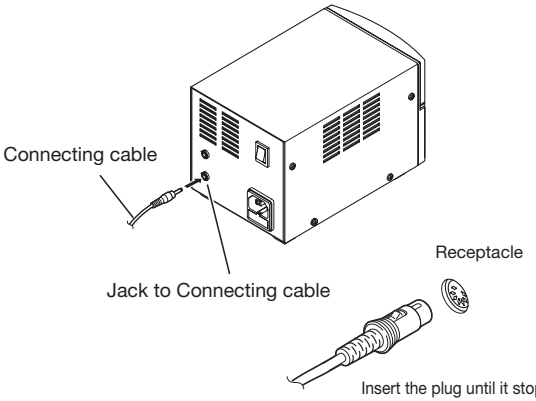

Insert the plug until it stops, and then pull it without pressing the lock pin.
If this does not disconnect the plug from the receptacle, the plug is inserted properly.

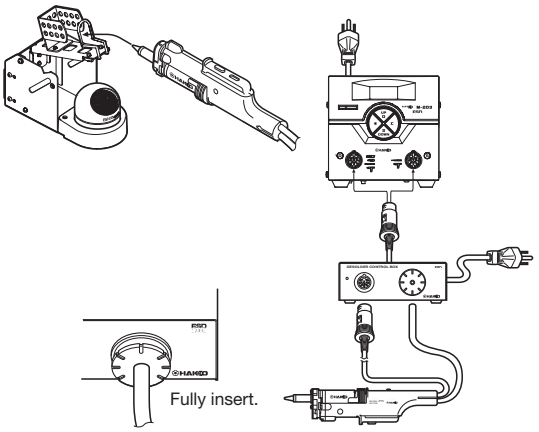

2. Put the MODEL FM-2024 into the iron holder

3. Connect the hose from the MODEL FM-2024 to the filter case cover on the DCB.

4. Connect the DCB to the shop air supply/compressor.
   Use only filtered air to eliminate the probability of dust, water, and oil content from fouling the mechanism.

   Adjust the pressure to 490 kPa (5.0 kgf/cm^2) with the regulator while allowing air to flow by pressing the button (or pulling the trigger) on the handpiece.

   ⚠CAUTION
   If you attempt to adjust the pressure without allowing air to flow, or if the tube size is not as specified, the suction capability will decrease. Ensure that the regulator shows less than 882 kPa (9.0 kgf/cm^2) when the trigger is turned OFF. If pressure equal to or higher than this value is applied, damage may result.

5. Turn ON the power
   Ensure that the power switch is OFF before inserting the AC plug.

   ⚠CAUTION
   Be sure to ground this product as it is ESD safe by design.

   Turn the power switches ON as follows: First, the DCB; second, the soldering station. Unless the DCB is turned on first, an error message will appear since the desoldering iron remains disconnected.

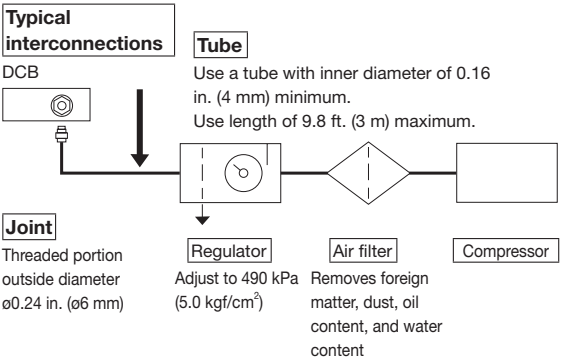

⚠CAUTION
Be sure to use an air filter. Foreign matter in the piping or the air supply can jam the solenoid valve, causing a failure.

5. OPERATION

Using the desoldering iron in the gun configuration.

To use the desoldering iron in the gun configuration, attach the handle to the straight grip.

To remove the handle, slide down the button located on the rear of the handle to unlock it, then slide the handle toward the back of the MODEL FM-2024.

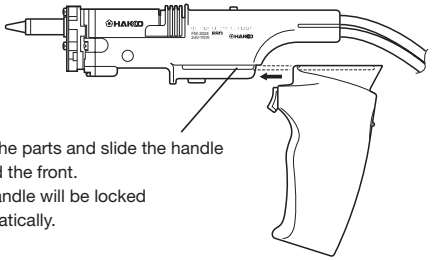

Align the parts and slide the handle toward the front.
The handle will be locked automatically.

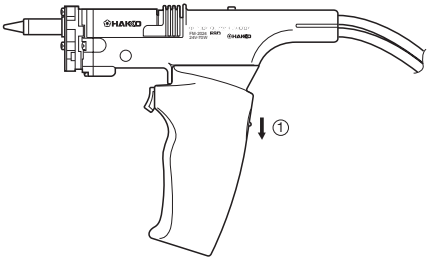

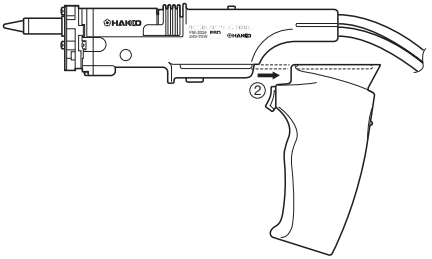

● Operation

1. Turn ON the power.

2. By default, when the set temperature is reached, the buzzer sounds, indicating that the unit is ready.

About setting temperature, refer to the instruction manual for the soldering station (HAKKO FM-203) Being used.

⚠CAUTION

When not in use, set the iron in the iron holder. The HAKKO FM-203 does not function properly if the power is turned on with the trigger pressed. Release the trigger and then turn the power ON.

5. OPERATION

If the nozzle tip is coated with oxidized film or the like, its thermal conductivity deteriorates. In contrast, if the nozzle end is wetted with a small amount of clean solder, its thermal conductivity increases.

1. Melt the solder.

Position the nozzle above the lead to be desoldered as shown in the illustration and melt the solder.

⚠CAUTION
Never allow the nozzle to touch the board itself.

Confirm that the solder is melted.

⚠CAUTION
To confirm that all solder is melted, observe the inside of the hole and the backside of the P.W.B. If this is difficult to do, try slowly moving the lead with the nozzle. If the lead moves, the solder is melted. Never move the lead by force. If it doesn't move easily, the solder isn't yet fully melted.

2. Extract the solder.

After confirming that the solder is completely melted, extract the solder by pressing the button (or squeezing the trigger)

⚠CAUTION
Never leave any solder remaining inside the hole in the P.W.B.

3. Problems during desoldering.

If solder remains, resolder the component and repeat the desoldering process.

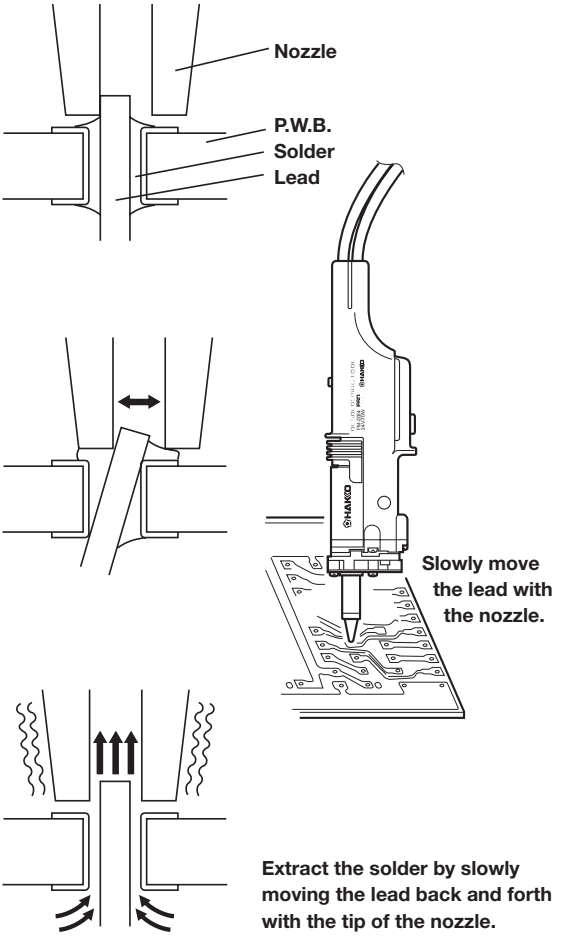

6. MAINTENANCE

Properly maintained, the MODEL FM-2024 desoldering tool should provide years of good service. Efficient desoldering depends upon the temperature, and the quality and quantity of the solder and flux. Perform the following service procedures as dictated by the conditions of the gun's usage.

⚠ WARNING

Since the desoldering tool can reach a very high temperature, please work carefully. Except when cleaning the nozzle and heating element, ALWAYS turn the power switch OFF and disconnect the power plug before performing any maintenance procedure.

Maintenance of nozzle

⚠CAUTION
The desoldering tool may be extremely hot. During maintenance, please work carefully.

Inspect and clean the nozzle.

- Plug in the power cord, turn the power switch ON and let the nozzle heat up.

⚠CAUTION
The cleaning pin will not pass through the nozzle until the solder inside the nozzle is completely melted.

- Clean out the hole of the nozzle with the nozzle cleaning pin (not included as a standard accessories).
- If the cleaning pin does not pass through the hole in the nozzle, clean with the cleaning drill. (not included as a standard accessories).
- Check the condition of the solder plating on the nozzle tip.
- Check visually if the nozzle was eroded.

⚠CAUTION
The inside hole and the surface of the nozzle is plated with a special alloy. Should this alloy become eroded by high-temperature solder, the nozzle will not be able to maintain the proper temperature.

- If the nozzle is still in a good condition, put some fresh solder on the nozzle tip to protect solder plated area from oxidation.

Cleaning with the nozzle cleaning pin

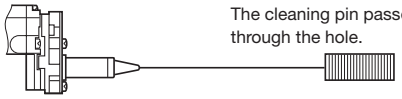

The cleaning pin passes completely through the hole.

Cleaning with the cleaning drill

- Before cleaning

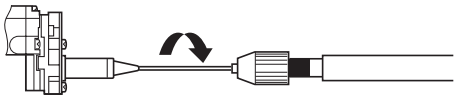

Insert the bit while turning it clockwise.

- After cleaning

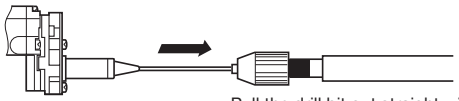

Pull the drill bit out straight without turning it.

⚠CAUTION
If the cleaning drill is forced into the nozzle, the drill bit could break or be damaged.
Please use the proper size cleaning pin or cleaning drill for the nozzle diameter.

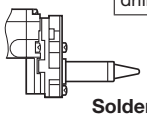

Solder plating

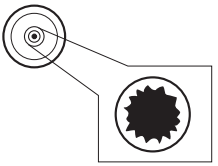

Hole is damaged by erosion.

- If the cleaning pin and cleaning drill does not pass through the hole in the nozzle, replace the nozzle.
- If the solder plating on the nozzle tip is worn, replace the nozzle.
- If the inside hole of the nozzle is eroded, replace the nozzle.

⚠CAUTION
Unfortunately, it is often difficult to observe this condition. Therefore, if desoldering efficiency goes down and all other parts appear to be OK, the nozzle is probably eroded and should be replaced.

6. MAINTENANCE

Cleaning the inside of suction pipe

Move the nozzle cartridge to the cleaning position indicated in figure at right. Change the position of the nozzle cartridge before turning the power ON, to prevent accidents.

To clean the inside of the suction pipe, ensure that the solder remaining in the pipe has been completely melted.

For the cleaning of the suction pipe, set the nozzle temperature to 400°C/750°F or higher.
Start this cleaning after the set temperature has been reached.

To clean the inside of the suction pipe, insert the cleaning drill fully into the suction pipe while turning it clockwise. Then remove the accumulated debris.

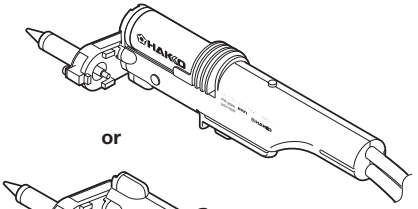

or

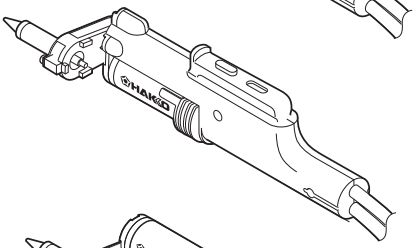

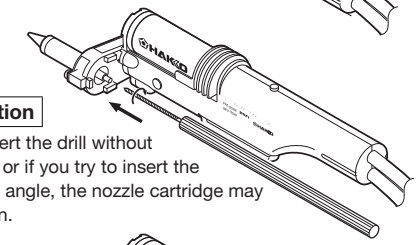

⚠Caution

If you insert the drill without turning it or if you try to insert the drill at an angle, the nozzle cartridge may be broken.

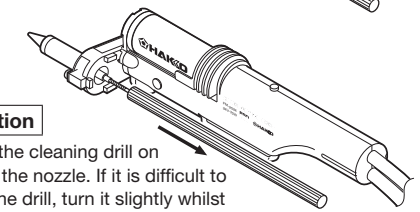

⚠Caution

Remove the cleaning drill on axis with the nozzle. If it is difficult to remove the drill, turn it slightly whilst withdrawing it. If you forcibly remove the drill, the cartridge may be broken.

Check and clean the front and back holder bushings

If foreign matter gets stuck on the contact surface between the front holder and the filter pipe assembly, or between the back holder bushing and the filter pipe assembly, air will be sucked into the tool, preventing normal desoldering. Remove the solder and flux adhering to the surface of front holder (A) and back holder (B) then connect the filter pipe assembly.

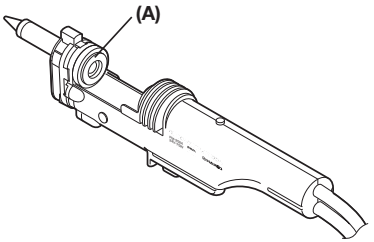

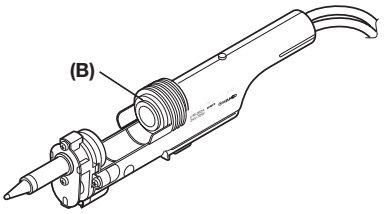

Check the nozzle (heater/ sensor) and connecting cable.

> ⚠**WARNING**
> Unless otherwise specified, perform the following steps after turning the power switch OFF and disconnecting the AC plug.

Checking the cord assembly

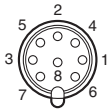

Plug

Switch circuit board

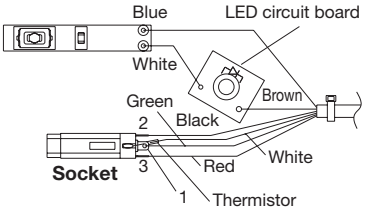

Checking the electrical continuity of the cord assembly

1. Remove the plug of the cord assembly from the station.
2. If the handle (for gun configuration) is attached, remove it.
3. Remove the nozzle cartridge. For this removal, see “Attaching and replacing the nozzle cartridge.”
4. Remove the screws for the grip and measure the resistance between the socket terminal and the plug pin as shown below (refer to the wiring diagram).

Plug pin 1	————	Red (socket) 3
Plug pin 2	————	Green (socket) 1
Plug pin 3	————	Black (socket) 2
Plug pin 4	————	Brown (LED circuit board)
Plug pin 5	————	White (thermistor)
Plug pin 6	————	Blue (switch circuit board)

If the resistance is larger than 0Ω or ∞ in any location, replace the cord assembly.

Checking the grounding line

1. Measure the resistance between plug pin 2 and the nozzle end.
2. If the resistance value exceeds 2Ω (at room temperature), perform the maintenance for the nozzle, which is described in page 16 of the instruction manual for the HAKKO FM-203. If this does not decrease the value, check the electrical continuity of the cord assembly.

Checking the heater/sensor

Checking for electrical continuity of heater/ sensor

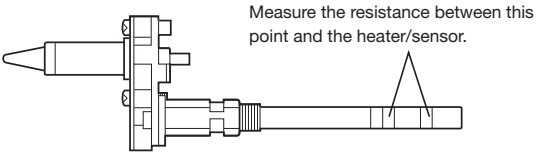

Measure the resistance at room temperature (15 to 25°C ; 59 to 77°F). The normal range is 8Ω ± 10%. If the resistance is outside this range, replace the nozzle assembly.

6. MAINTENANCE

Checking and replacing the ceramic paper filter (DCB)

1. Turn the filter case cover on the DCB clockwise to unlock it, then remove the cover by pulling it straight out.

DCB

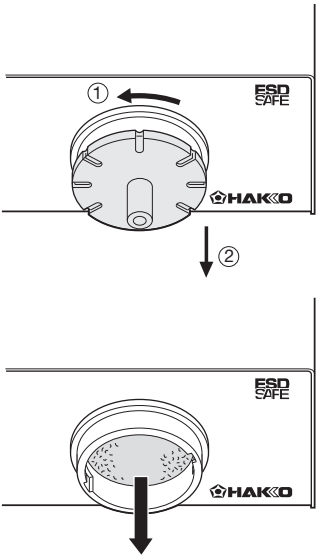

The filter is clogged with hardened flux.

Replace the ceramic paper filter (DCB).

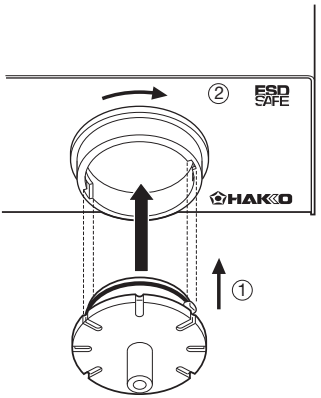

Fit the filter case cover in place.

After replacing the ceramic paper filter (DCB), press the filter case cover with its tabs inserted into the corresponding slots in the filter case then turn clockwise to lock it.

7. TROUBLE SHOOTING GUIDE

⚠ WARNING

To check inside or replace parts, be sure to turn the power switch OFF and remove the AC plug to avoid electric shock.

- **No operation occurs when the power switch is turned ON.**

CHECK : Is the power cord connected properly (Soldering station and/or DCB)?
ACTION : Properly connect the power cable.
CHECK : Is the fuse blown out?
ACTION : After identifying the cause (e.g., short-circuit in the desoldering iron), replace the fuse.

- **When the power switch is turned ON. Soldering iron error is displayed.**
  - HAKKO FM-203 shows [C-E].

CHECK : Is the MODEL FM-2024 connected?
ACTION : Connect the MODEL FM-2024.
CHECK : Is the cord assembly connected properly?
ACTION : Connect again while referring to “Preparation - Assembling and Connections.”
CHECK : Is the cord assembly broken?
ACTION : Refer to “Checking for electrical discontinuity of the cord assembly” in Maintenance.

- **The nozzle is not heated. Sensor error is displayed.**
  - HAKKO FM-203 shows [S-E].

CHECK : Is the nozzle cartridge fully inserted?
ACTION : Fully insert the nozzle cartridge.
CHECK : Is the cord assembly broken?
Is the heater/sensor disconnected?
ACTION : Refer to “Checking for electrical continuity of cord assembly” and “Checking for electrical continuity of heater/sensor” in Maintenance.

- **The nozzle tip does not extract solder.**

CHECK : Is the set temperature for the nozzle too high?
ACTION : Set the nozzle temperature at the appropriate level.
CHECK : Is the nozzle tip plugged or coated with oxide?
ACTION : Remove the oxide by cleaning the nozzle tip with Hakko 599B Tip cleaner.
CHECK : Has the nozzle tip deteriorated due to corrosion?
ACTION : Replace the nozzle.

7. TROUBLE SHOOTING GUIDE

- **The nozzle temperature is too high.**

CHECK : Is the cord assembly broken?
ACTION : Refer to “Checking for electrical continuity of connecting cable” in Maitenance.

- **The nozzle temperature is too low.**

CHECK : Is any oxide adhered to the nozzle tip?
ACTION : Remove the oxide by cleaning the nozzle end with Hakko 599B Tip cleaner.
CHECK : Has the nozzle tip deteriorated due to corrosion?
ACTION : Replace the nozzle.

- **H-E Error indicating low temperature alarm setting occurs frequently.**

CHECK : Is the setting for the low temperature alarm too low?
ACTION : Increase the setting.

- **HSE is displayed indicating heater terminal short-circuit error.**

CHECK : Is the nozzle cartridge for use with the MODEL FM-2024?
ACTION : Turn the power switch OFF, press-fit the nozzle for the MODEL FM-2024, then turn the power switch ON.

- **The solder cannot be removed.**

CHECK : Is the heating value insufficient?
ACTION : In cases where the piece to be desoldered is large, Hakko recommends the use of a pre-heater to preclude the possibility of damage to the board or components that might occur as a result of excessively high nozzle temperatures.
CHECK : Is it difficult to get solder on the nozzle?
ACTION : Refer to “Maintenance of nozzle”.

- **The suction power has decreased.**

CHECK : Is the inside of the nozzle or suction pipe clogged?
ACTION : Refer to “Maintenance of nozzle” and “Cleaning the inside of suction pipe.”

CHECK : Is the filter pipe assembly full of extracted solder?
ACTION : If the filter pipe assembly is 70 - 80% full of solder, replace the filter pipe assembly. If the ceramic paper filter is stiff with absorbed flux, replace the filter pipe assembly.

CHECK : Is solder residue stuck on the contact surface between the front holder or the back holder bushing and the filter pipe assembly?
ACTION : Refer to “Checking and cleaning front and back holder bushings.”

CHECK : Has the ceramic paper filter (DCB) deteriorated?
ACTION : The ceramic paper filter (DCB) is full of flux, causing a loss of suction. Refer to “Checking and replacing the ceramic paper filter (DCB).”

※ 各言語（日本語、英語、中国語、フランス語、ドイツ語、韓国語）の取扱説明書は以下のURL、HAKKO Document Portalからダウンロードしてご覧いただけます。
（商品によっては設定の無い言語がありますが、ご了承ください）
* 各國語言(日語,英語,中文,法語,德語,韓語)的使用説明書可以通過以下网站的HAKKO Document Portal 下載參閱。(有一部分的產品沒有設定外語對應,請見諒)
* Instruction manual for the language, Japanese, English, Chinese, French, German and Korean can be downloaded from the following URL, HAKKO Document Portal.
(Please note that some language may not be available depending on the product.)

https://doc.hakko.com

8. PARTS LIST

Desolder control box

Item No.	Part No.	Part Name	Specifications
①	C1492	Desolder control box/120V	With power cord, 3 wired cord & American plug
	C1528	Desolder control box/230V	With power cord, 3 wired cord & European plug CE
	C1529	Desolder control box/230V	With power cord, 3 wired cord & BS plug CE
②	A1613	Ceramic paper fi lter	Set of 10
③	B2880	Vacuum outlet cap	W/o-ring
	B2068	Power cord, 3 wired cord & American plug	For U.S.A.
	B3053	Power cord, 3 wired cord & European plug	CE, KTL
	B3054	Power cord, 3 wired cord & BS plug	CE
	B3505	Power cord, 3 wired cord & American plug	

Desoldering tool

Item No.	Part No.	Part Name	Specifications
	FM2024-21	Conversion kit/120V	DCB: C1492
	FM2024-33	Conversion kit/230V	DCB: C1528
	FM2024-34	Conversion kit/230V	DCB: C1528
	FM2024-35	Conversion kit/230V	DCB: C1529
① - ⑥, ⑧	FM2024-02	Desoldering tool	24V, 70W
①	A1612	Filter pipe assembly	Set of 10
②	A1512	Front holder	
③	A1513	Back holder bushing	
④	B2872	Handle	For gun configuration
⑤	B2873	Cleaning drill	For heating element
⑥	B2876	Nozzle remover	
⑦	B2877	Hose	
⑧	B2878	Back holder	
⑨	B2879	Flange	
⑩	B3253	Connecting cable	

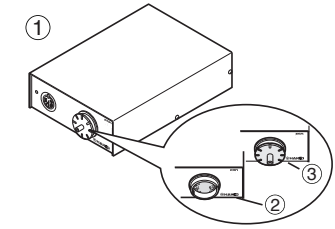

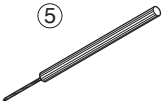

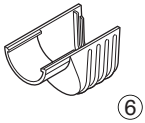

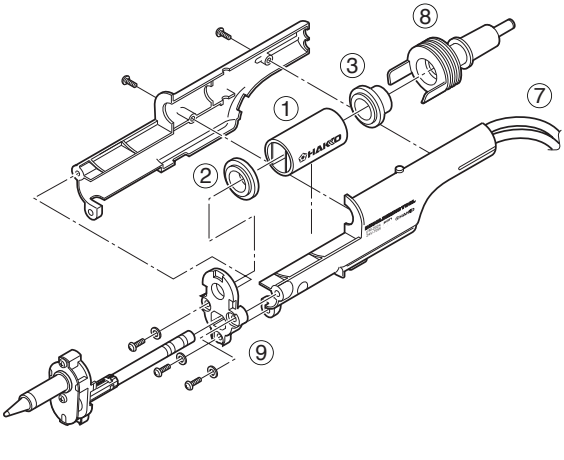

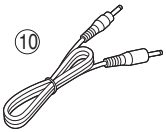

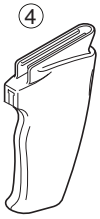

● Iron Holder

Item No.	Part No.	Part Name	Specifications
① - ⑦	FH200-05	HAKKO FH-200	With tip cleaner
①	B3251	Iron holder base	With rubber feet
②	B3249	Cleaner base	With rubber feet
③	599B-02	Tip cleaner	
④	599-029	Cleaning wire	
⑤	B3413	Iron holder assembly	With screws
⑥	B3250	Stay	
⑦	B3252	Switch case assembly	

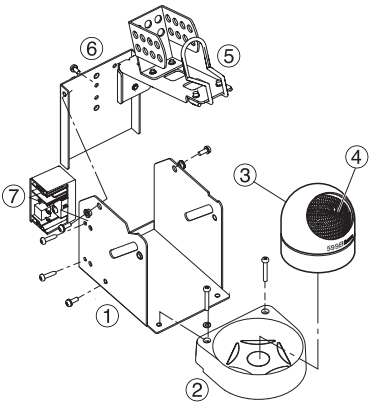

Nozzle

Part No.	Part Name	øA	øB
N3-06	Nozzle 0.6 mm (0.02 in.)	0.6 mm (0.02 in.)	1.9 mm (0.07 in.)
N3-08	Nozzle 0.8 mm (0.03 in.)	0.8 mm (0.03 in.)	2.0 mm (0.08 in.)
N3-10	Nozzle 1.0 mm (0.04 in.)	1.0 mm (0.04 in.)	2.2 mm (0.09 in.)
N3-13	Nozzle 1.3 mm (0.05 in.)	1.3 mm (0.05 in.)	2.6 mm (0.10 in.)
N3-16	Nozzle 1.6 mm (0.06 in.)	1.6 mm (0.06 in.)	3.0 mm (0.12 in.)
N3-20	Nozzle 2.0 mm (0.08 in.)	2.0 mm (0.08 in.)	3.4 mm (0.13 in.)
N3-23	Nozzle 2.3 mm (0.09 in.)	2.3 mm (0.09 in.)	3.8 mm (0.15 in.)

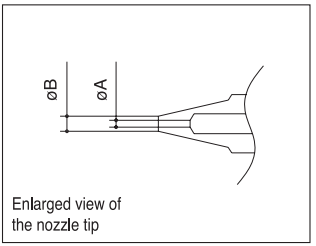

Part No.	Part Name	øA	øB
N3-L10	Long Nozzle 1.0 mm (0.04 in.)	1.0 mm (0.04 in.)	2.3 mm (0.09 in.)

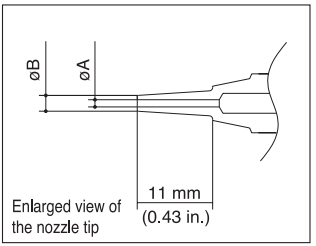

● Option

Item No.	Part No.	Part Name	Specifications
①	B2874	Cleaning pin	For ø0.6 mm (0.02 in.) nozzle
	B1086		For ø0.8 mm (0.03 in.) nozzle
	B1087		For ø1.0 mm (0.04 in.) nozzle
	B1088		For ø1.3 mm (0.05 in.) nozzle
	B1089		For ø1.6 mm (0.06 in.) nozzle
	B2875		For ø2.0 mm (0.08 in.) / ø2.3 mm (0.09 in.) nozzle

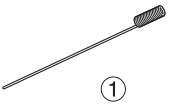

9. WIRING DIAGRAM

● DCB

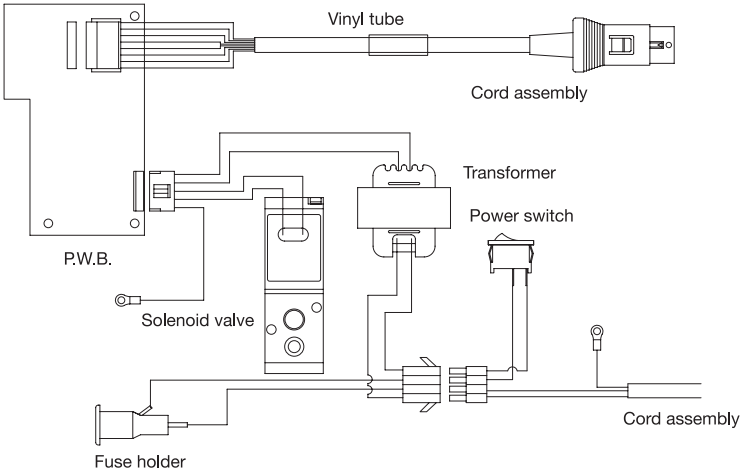

● MODEL FM-2024

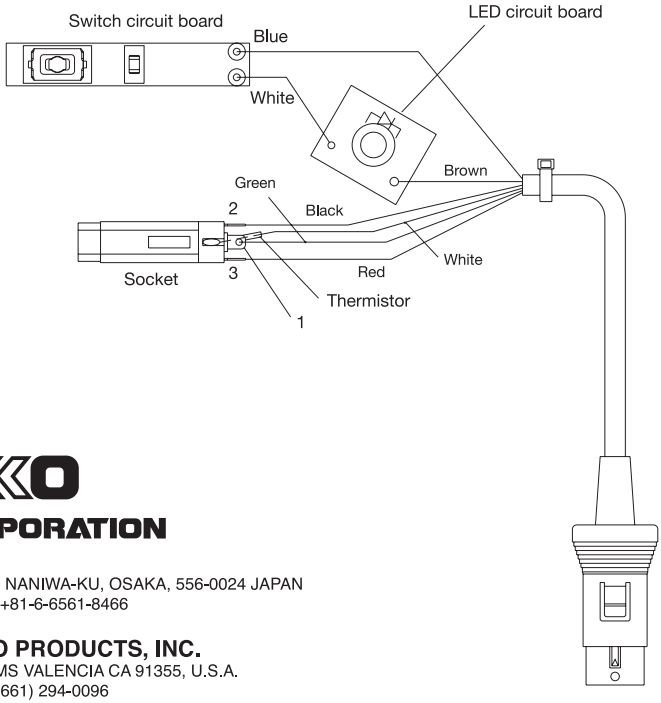

HAKKO CORPORATION

HEAD OFFICE
4-5, SHIOKUSA 2-CHOME, NANIWA-KU, OSAKA, 556-0024 JAPAN
TEL:+81-6-6561-3225 FAX:+81-6-6561-8466
http://www.hakko.com

AMERICAN HAKKO PRODUCTS, INC.
28920 N. AVENUE WILLIAMS VALENCIA CA 91355, U.S.A.
TEL: (661) 294-0090 FAX: (661) 294-0096
Toll Free (800)88-HAKKO (42556) www.hakkousa.com

© 2007-2019 HAKKO Corporation. All Rights Reserved.

2019.3
MA01658XZ190327