TECHNICAL DATA SHEET

Part#: 531A-US

Pliers - Replaceable Tip - Straight .15" x .05" Jaw - Acetal Insert
Useful in straightening leads and wires when metal-to-metal contact is not desired

The 531A-US soft tip acetal jaw plier is temperature resistant up to 175 degrees C. The overall length is 5.75". It features an ergonomically molded antimicrobial Anti-Static grip (10^{10} ohms/sq surface resistivity) with dual leaf springs. The acetal jaws are screwed on and can be replaced.
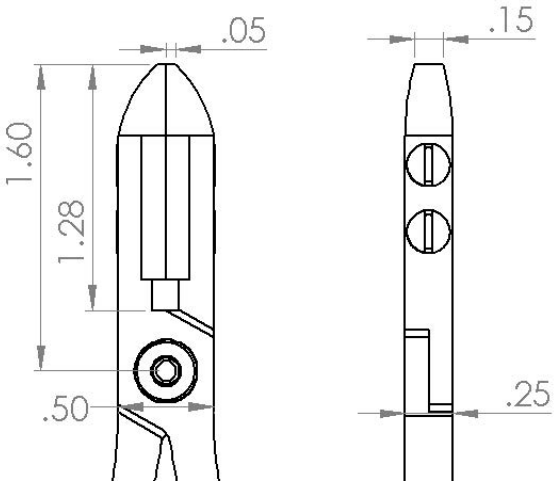
• Precision Level	★★★★★
• Material	Acetal
• Surface Resistivity	Insulative
• Shape	Straight
Tip Size	.15" x .05" (3.8mm x 1.2mm)
• Tip Angle	Straight
• Tip Length	1.12" (28.4mm)
• Body Width	.5" (12.7mm)
• Body Height	.25" (6.35mm)
• OAL	5.75" (143.75mm)
• Weight (OZ)	5
• UPC	662847007286
• Schedule B	8203.20.60.30
• ECCN	EAR99
• UNSPSC Code	27112136
• Country of Origin	USA
• Group	Replaceable Tip Soft Nose