THIS IS ISSUED IN STRICT CONFIDENCE THAT IT IS NOT USED AS A BASIS FOR MANUFACTURE OR SALE AND THAT IT IS NOT COPIED, REPRINTED OR DISCLOSED TO A THIRD PARTY EITHER WHOLLY OR IN PART WITHOUT THE PRIOR WRITTEN CONSENT OF CAL TEST ELECTRONICS, INC.

REVISIONS			
REV.	DESCRIPTION	DATE	APPROVED
A	INITIAL RELEASE	6/3/2021	
B	ITEM I UPDATED TO V4.3.	6/23/2021	
C	DRAWING UPDATED TO NEW B SIZE FORMAT; DWG. NO. WAS P445700; MDP BODY UPDATED TO V4.3.1	11/3/2021	B. HANSEN
D	DIM 52.9 WAS 52.6; NOTE 1, ADDED 22 AWG (19X34), DELETED ∅3.5; NOTE 3, VOLTAGE WAS 300 VRMS, ADDED CURRENT; NOTE 5, ADDED CE MARK.	6/8/2022	B. HANSEN

NOTES:

1. ALL SPECIFICATIONS SUBJECT TO CHANGE WITHOUT NOTICE.

2. MATERIAL:
   - MDP CONNECTOR -
     - MOLDED BODY: POLYPROPYLENE (PP), BLACK.
     - 4mm BANANA PLUGS -
       - BODY: BRASS, NICKEL PLT.
       - CAGE CONTACT: BECU, NICKEL PLT.
   - RG58C/U COAX CABLE -
     - JACKET: PVC, BLACK; ∅4.95 O.D.
     - DIELECTIC: PE
     - CENTER CONDUCTOR: 22 AWG (19X34) TINNED COPPER, STRANDED.
   - BREAKOUT: PVC, BLACK
   - MINIPRO IC CLIP -
     - BODY AND BARREL: NYLON (PA 6).
     - CONTACT: BECU, GOLD PLT.

3. ELECTRICAL:
   - IMPEDANCE:
     - ASSEMBLY: NON-CONSTANT
     - RG58C/U: 50Ω
   - VOLTAGE -
     - 30 VRMS / 60 VDC (HANDHELD)
     - 500 VRMS (HANDS FREE)
       - DO NOT USE ON CIRCUITS SUBJECT TO TRANSIENT OVERVOLTAGES.
   - CURRENT: 3 A MAX.

4. MECHANICAL:
   - OPERATING TEMPERATURE: 0°C TO +50°C
   - CABLE BEND RADIUS:
     - REPEATED MIN. - 49.8 mm
     - ONE-TIME MIN. - 25 mm

5. CE MARK:
   - ROHS 2 COMPLIANT.

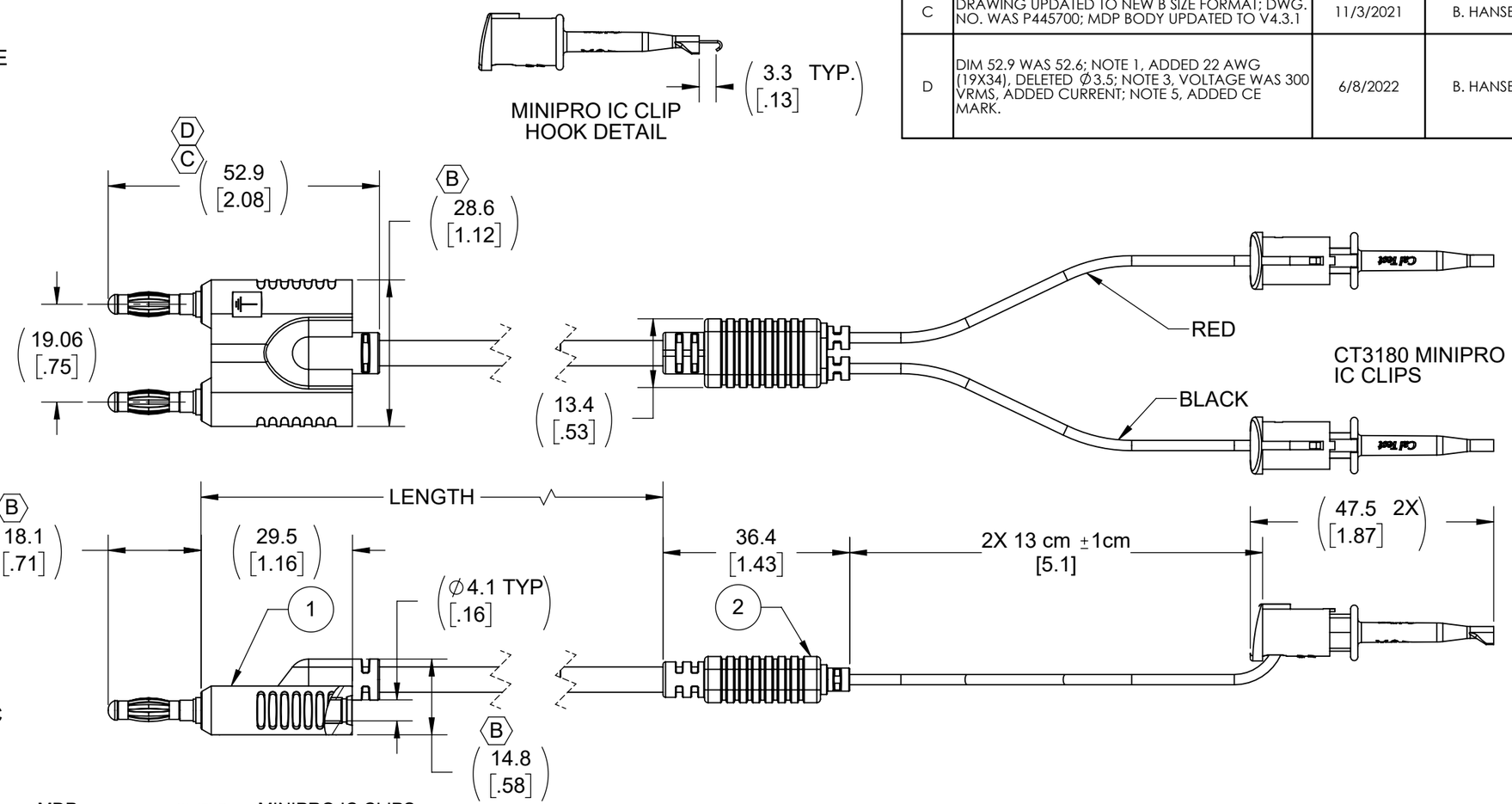

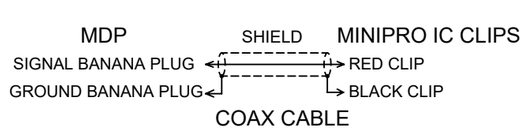

SCHEMATIC

CT4457-100	100 ±1.5	-100
MODEL NUMBER	LENGTH & TOLERENCE (cm)	NODEL NUMBER -XXX EXTENSION

MODEL NUMBER TABLE

ITEM NO.	DESCRIPTION	QTY.
2	MOLDED BREAKOUT, 2mm PVC LEADS TO MINIPRO IC CLIPS	1
1	MOLDED ASSEMBLY, 4mm DOUBLE PLUG (MDP), RG58C/U CABLE	1

THIRD ANGLE PROJECTION

UNLESS OTHERWISE SPECIFIED DIMENSIONS ARE IN MILLIMETERS
TOLERANCES ARE:
X.X = ±0.5 X.X° = ±0.5°
X.XX = ±0.25
X.XXX = ±0.125
DO NOT SCALE DRAWING

MATERIAL: SEE NOTES
TREATMENT: N/A
FINISH: N/A

PROJECT NO. A660(a)

APPROVALS		DATE
DRAWN	WDH	6/3/2021
CHECKER		
ENGR.	B. HANSEN	6/3/2021
DESIGN ACTIVITY	ENGINEERING	6/3/2021

METRIC

Cal Test ELECTRONICS
22820 Savi Ranch Prky.
Yorba Linda, CA 92887
USA

TITLE: CABLE ASSEMBLY, MDP TO MiniPRO IC TEST CLIP BREAKOUTS, RG58C/U

SIZE	CAGE CODE	DWG. NO.	REV.
B	43F45	CT4457	D

SCALE 1:1 SHEET 1 OF 1