NOTES:

1. MATERIALS AND FINISHES:
   - BODY - BRASS, NICKEL PLATING
   - FERRULE - BRASS, NICKEL PLATING
   - LOCK WASHER - BRASS, NICKEL PLATING
   - HEX NUT - BRASS, NICKEL PLATING
   - LOCK RING - BRASS, GOLD PLATING
   - CONTACT - PHOSPHOR BRONZE, GOLD PLATING
   - INSULATORS - PTFE, NATURAL
   - GASKET - SILICON RUBBER, RED

2. ELECTRICAL:
   - A. IMPEDANCE: 75 OHM
   - B. FREQUENCY RANGE: DC-12 GHz
   - C. VSWR(RETURN LOSS): 1.22 (20 dB) MAX @ DC-6 GHz
     1.43 (15 dB) MAX @ 6-12 GHz
   - D. DIELECTRIC WITHSTANDING VOLTAGE: 1500 VRMS, MIN.

3. MECHANICAL:
   - A. DURABILITY: 500 CYCLES MIN.
   - B. TEMPERATURE RANGE: -65°C TO +165°C

4. CRIMPED FERRULE
   HEX CRIMP SIZE .319"

5. CRIMPED CONTACT PIN
   SQ. CRIMP SIZE .042"

6. SHOWS CABLE ENTRY DIMENSIONS

7. PACKAGING:
   - A. QUANTITY: SINGLE PACK
   - B. MARKING: PACKAGING TO BE MARKED
     "AMPHENOL RF, 31-70565-12G & DATE CODE"

THIRD ANGLE PROJ.

REVISIONS				
REV	DESCRIPTION	DATE	ECN	APPR
A	RELEASE TO MFG.	28-Jun-19	12045	EH

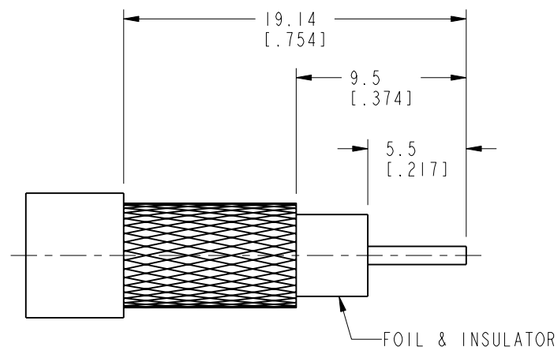

RECOMMENDED CABLE STRIPPING DIMENSIONS

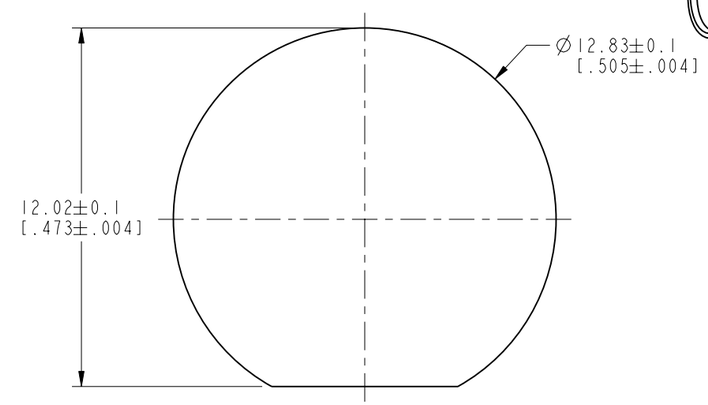

RECOMMENDED MOUNTING HOLE

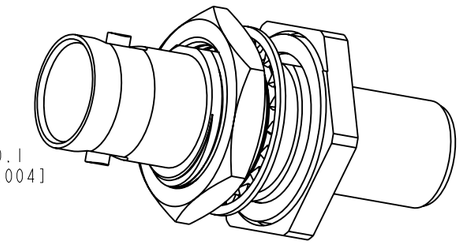

SCALE 2.000

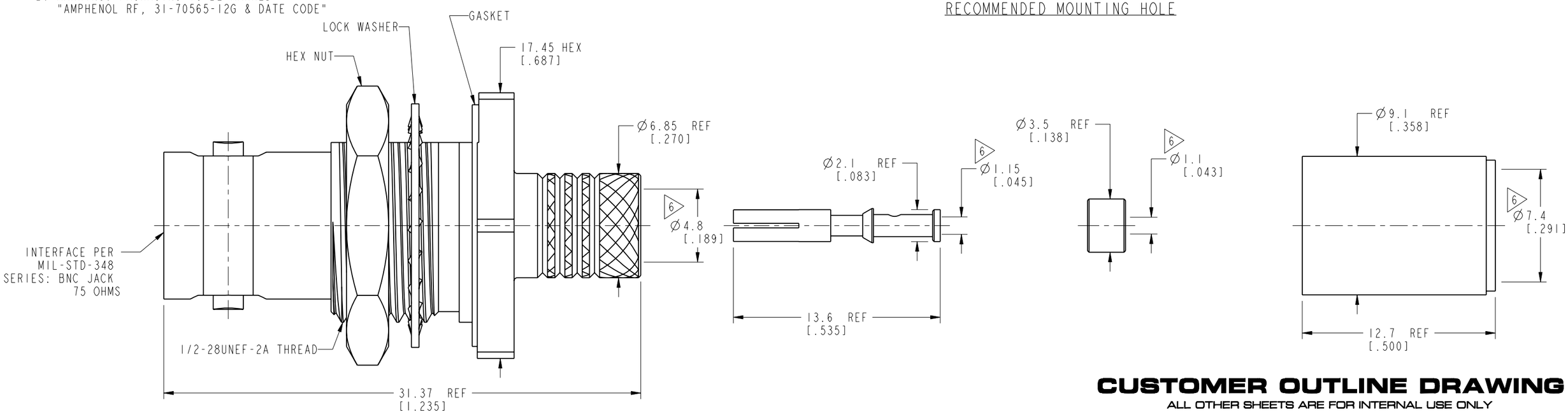

CUSTOMER OUTLINE DRAWING

ALL OTHER SHEETS ARE FOR INTERNAL USE ONLY

UNLESS OTHERWISE SPECIFIED, DIMENSIONS ARE IN METRIC AND TOLERANCES ARE:

<0.5mm	0.5 - 6mm	6 - 30mm	30 - 120mm	ANGLES
± 0.05mm	±0.1mm	±0.2mm	± 0.3mm	±1°

NOTICE - These drawings, specifications, or other data (1) are, and remain the property of Amphenol corp. (2) must be returned upon request; and (3) are confidential and not to be disclosed to any person other than those to whom they are given by Amphenol Corp. the furnishing of these drawings, specifications, or other data by Amphenol Corp., or to any other person to anyone for any purpose is not to be regarded by implication or otherwise in any manner licensing, granting rights to permitting such holder or any other person to manufacture, use or sell any product, process or design, patented or otherwise, that may in any way be related to or disclosed by said drawings, specifications, or other data.

MATERIAL
NOTE 1

REFERENCE
EAR# 8870
REF:

CONFIGURATION LEVEL: In Work

FINISH

DRAWN	DATE
W.ZENG	29-Jun-19
ENGINEER	DATE
S.DUAN	4-Jul-19
APPROVED	DATE
S.HSIEH	4-Jul-19
CAD FILE	

TITLE
BNC BULKHEAD JACK
FOR BELDEN 4694R
CABLE

SCALE: 4.0:1.0 | SHEET 2 OF 2

DWG SIZE	REV
B	A

Amphenol RF

www.amphenolrf.com

DRAWING NO.	31-70565-12G
ITEM NO.	31-70565-12G
PART NO.	31-70565-12G