UL98 Motor Disconnect Switch - Sheet Metal Enclosure

- Can be used locally at the motor
- UL Type 4
- Excellent in harsh weather conditions
- Resistant to many chemicals
- Corrosion and UV resistant
- IEC IP65 Protection Level
- Lockable - Defeatable Handle

E502897

All Models are lockable with up to 3 padlocks.

Catalog Number								
- Yellow/Red Handle	KET360UL98 Y/R		KET460UL98 Y/R		KET3100UL98 Y/R		KET4100UL98 Y/R	
- Black Handle	KET360UL98		KET460UL98		KET3100UL98		KET4100UL98	
No. of Poles*	3		4		3		4	
General Purpose Current	60 A		60 A		100 A		100 A	
Maximum Voltage	600V AC		600V AC		600V AC		600V AC	
Horsepower Rating /HP	1 Phase	3 Phase	1 Phase	3 Phase	1 Phase	3 Phase	1 Phase	3 Phase
120V AC	3	–	3	–	5	–	5	–
240V AC	7.5	20	7.5	20	10	25	10	25
480V AC	–	40	–	40	–	50	–	50
600V AC	–	60	–	60	–	75	–	75
Short Circuit Withstand Rating at 600 V	50 kA/60 A Class J		50 kA/60 A Class J		50 kA/100 A Class J		50 kA/100 A Class J	
Terminal Size Acceptability (Cu Conductors only, 75°C)	8-1/0 AWG		8-1/0 AWG		8-1/0 AWG		8-1/0 AWG	
Terminal Torque	65lb. in. (6.0 Nm)		65lb. in. (6.0 Nm)		65lb. in. (6.0 Nm)		65lb. in. (6.0 Nm)	
Screw Head Type	4mm Allen Key		4mm Allen Key		4mm Allen Key		4mm Allen Key	
Dimensions & Size	TR01		TR01		TR02		TR02	

(to convert to inches multiply by 0.03937)

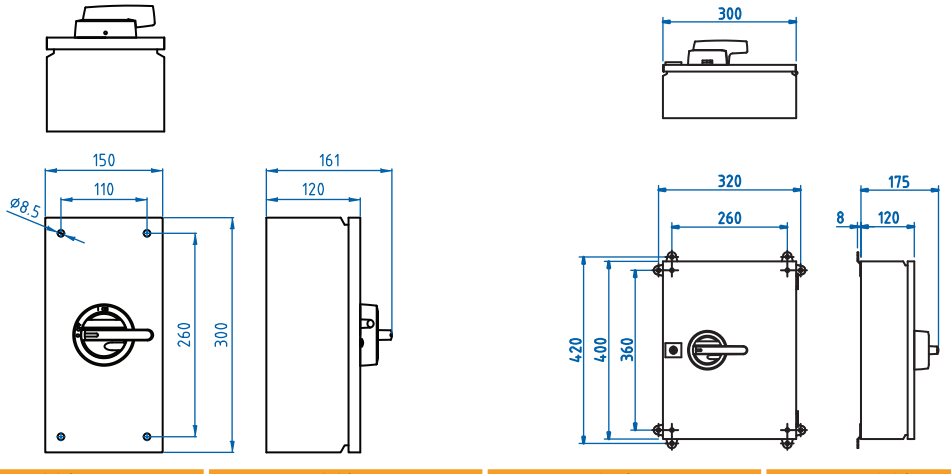

Weight	4.3 kg	4.4 kg	9.7 kg	9.8 kg

Suitable Accessories

AUXILIARY SWITCHES

Cat. No.	1.V160KU	2.V160KU
No. if Contacts	1n.o./1n.c.	2n.o./2n.c.
Electrical Rating	16 A/1/2HP/125-250V AC	

* 6 and 8 pole versions along with changeover version available upon request.