## 35mm Enclosure

### Without Terminals

### TECHNICAL INFORMATION

**Electrical:**
–

**Housing Material:**
Glass-filled Polycarbonate

**Temperature Range:**
Up to 115°C (239°F)

**Flammability Rating:**
UL94 V-O

**Color:**
Light Gray Cover, Black Base

**Terminal Type:**
–

**Terminal Screw Size:**
–

**Recommended Torque:**
–

**PCB Locations:**
(3) Vertical, Parallel

**Mounting:**
35mm DIN Rail

### ORDERING INFORMATION

| Part Number | Type | Description | PCB Connection |
|---|---|---|---|
| 91.810 | KU4188B | Without Terminals | None |

### ACCESSORIES

| Accessories | Part Number | Type |
|---|---|---|
| 1 Meter DIN Rail | 2511120/1M | TS35x7.5/1M |

### ENCLOSURE DRAWING (To convert to inches divide by 25.4.)

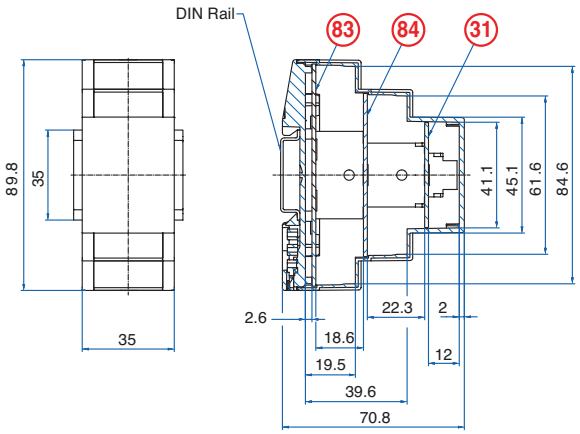


### PCB DRAWING (To convert to inches divide by 25.4.)

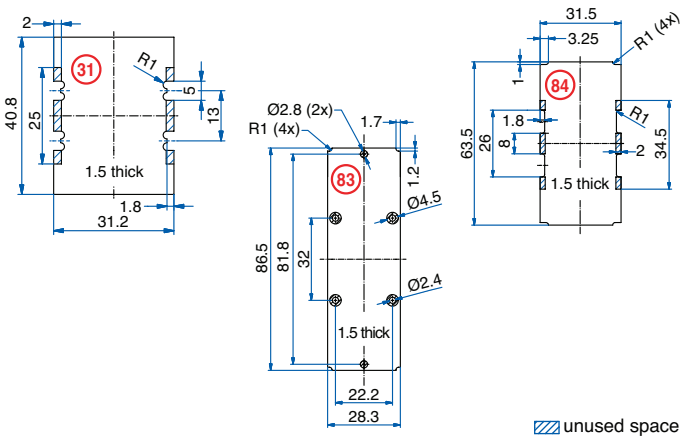


## 20 Terminal

### Fixed PCB Blocks

### TECHNICAL INFORMATION

**Electrical:**
12A, 250V, 24-12 AWG

**Housing Material:**
Glass-filled Polycarbonate

**Temperature Range:**
Up to 115°C (239°F)

**Flammability Rating:**
UL94 V-O

**Color:**
Light Gray Cover, Black Base and Terminals

**Terminal Type:**
Screw / Rising Clamp

**Terminal Screw Size:**
M2.5

**Recommended Torque:**
0.4Nm

**PCB Locations:**
(2) Vertical, Parallel

**Mounting:**
35mm DIN Rail

### ORDERING INFORMATION

| Part Number | Type | Description | PCB Connection |
|---|---|---|---|
| 91.811 | KU4188F | Fixed PCB Terminal | Machine Solder |

### ACCESSORIES

| Accessories | Part Number | Type |
|---|---|---|
| 1 Meter DIN Rail | 2511120/1M | TS35x7.5/1M |
| Terminal Cover (12 pole) | 91.801.1 | TCS/12 |

### ENCLOSURE DRAWING (To convert to inches divide by 25.4.)

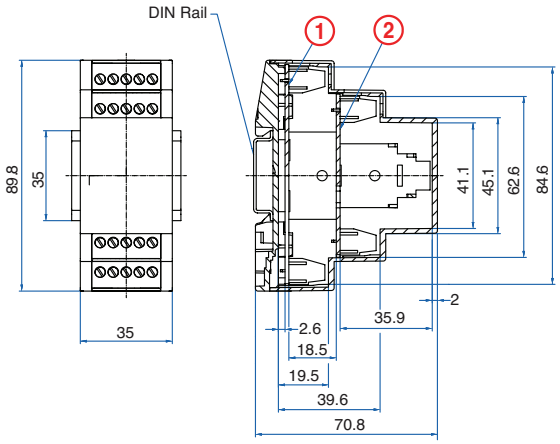

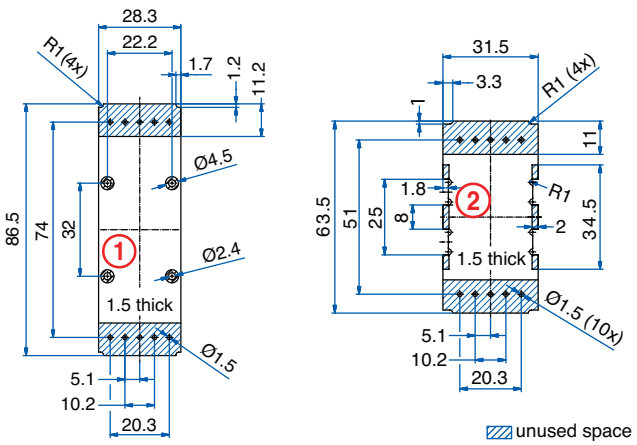
### PCB DRAWING (To convert to inches divide by 25.4.)