SCIENSCOPE

OPTICAL DIVISION

PARTS & ACCESSORIES

INDUSTRY STANDARD INTERCHANGEABLE PARTS & ACCESSORIES

COMPLETE SOLUTION FOR YOUR OPTICAL NEEDS

5751 SCHAEFER AVE
CHINO, CA 91710

1 (800) 216 - 1800
WWW.SCIENSCOPE.COM

SSZ-II Series & Accessories

The SSZ series is the cornerstone of the Scienscope stereo zoom microscope line. The compact and durable design incorporates the Greenough optical system delivering exceptional flatness and depth of field as well as clarity and accurate color. With over 20 years of continued customer satisfaction, the SSZ has remained Scienscope's most-popular microscope. The SSZ Series can share many compatible optical components and parts with several major manufacturers.

SZ-BD-B2A

SSZ-II STEREO ZOOM BINOCULAR BODY W/10X EYEPIECES

SZ-BD-T3A

SSZ-II STEREO ZOOM TRINOCULAR BODY W/10X EYEPIECES

- *Quality construction and optics*
- *Highest customer satisfaction*
- *Largest variety of accessories*
- *True Trinocular*

Ergonomic

Our ergonomic microscope help by reducing stress on your eyes by allowing them to rest below the natural eye level at a 45° angle, reducing the need to bend your neck.

SPECIFICATIONS	SZ-BD-B2A
Eyepieces Inclination	45 degrees
Objective Zoom Range	0.67X to 4.5X
Diopter Adjustment	+/- 5 Dual Independent
Interpupillary Adjustment	50mm - 76mm
Zoom Ratio	1:6.7
Eyepieces	10X
System Magnification	6.7x to 45x w/ 10x EP
Field of View	32.8mm - 4.9mm w/ 10x EP
Working Distance	100mm
Warranty	5 Years

SSZ-II Series & Accessories

The SSZ Series has the most available optical accessories which are compatible with many major microscope manufacturers on the market today and for discontinued models and makers. Our design is an anti-mold and air-tight sealed body which eliminates the need for regular maintenance and adds additional reliability in most working environments.

EYEPIECES

PART NUMBER	DESCRIPTION
SZ-LE-W10	10X WIDE EYEPIECES (PAIR) FOR SSZ-II SERIES
SZ-LE-W20	20 WIDE EYEPIECES (PAIR) FOR SSZ-II SERIES

CAMERA ADAPTER / VIDEO COUPLERS

PART NUMBER	DESCRIPTION
SZ-CP-05A	SSZ-II 0.5X CCD VIDEO COUPLER
SZ-CP-10A	SSZ-II 1X CCD COUPLER

OBJECTIVE LENSES

PART NUMBER	DESCRIPTION
SZ-LA-03	0.3X AUXILIARY LENSE FOR SSZ-II / SSZ SERIES
SZ-LA-04	0.4X AUXILIARY LENSE FOR SSZ-II / SSZ SERIES
SZ-LA-05	0.5X AUXILIARY LENSE FOR SSZ-II / SSZ SERIES
SZ-LA-07	0.7X AUXILIARY LENSE FOR SSZ-II / SSZ SERIES
SZ-LA-10	SSZ SERIES RING LIGHT ADAPTER
SZ-LA-15	1.5X AUXILIARY LENS FOR SSZ-II/ SSZ SERIES
SZ-LA-20	2X AUXILIARY LENS FOR SSZ-II/SSZ SERIES

Up-gradable Systems

Available upgrades on eyepieces, objectives lenses, light sources, cameras and many other microscope components allowing for a flexible adaptation to your changing workflow.

OPTICS STEREO ZOOM MICROSCOPES

NZ Series Parts & Accessories

Featuring a zoom magnification of 5x and a long working distance of 115mm, the NZ Series is well suited for all industrial applications. The airtight design allows the microscope to be placed in environments where the temperature and humidity are high. The NZ Series trinocular is a true-trinocular using the highest quality beam splitter for an exceptionally flat image.

NZ-BD-B2

NZ SERIES BINOCULAR BODY W/10X EYEPIECES; 45° INCLINED EYEPIECES

SPECIFICATIONS	SZ-BD-B2A
Eyepieces Inclination	45 degrees
Objective Zoom Range	08X to 5X
Diopter Adjustment	+/- 5 Dual Independent
Interpupillary Adjustment	52mm - 75mm
Zoom Ratio	6. 3:1
Eyepieces	10X
System Magnification	8X to 50X w/ 10X EP
Field of View	27.5mm - 4.4mm
Working Distance	115mm
Warranty	5 Years

NZ-BD-T3

NZ TRINOCULAR BODY W/10X EYEPIECES

- *Quality construction and optics*
- *Long working distance*
- *Maintenance free*
- *True trinocular*
- *Compatible parts with major manufacturers*

NZ Binocular Optical Specifications

EYEPIECES

	10X		15X		20X		
Objective Lense	MAG	FOV	MAG	FOV	MAG	FOV	Working Distance
0.5X	4X- 25X	55- 8.8 mm	6X- 37.5X	40- 6.4 mm	8X- 50X	40- 6.4 mm	211mm
1X	8X- 50X	27.5- 4.4 mm	12X- 75X	20- 3.2 mm	16X- 100X	20- 3.2 mm	115mm
2X	16X- 100X	13.8- 2.2 mm	24X- 150X	10- 1.6 mm	32X- 200X	10- 1.6 mm	43.5mm

Optical Magnification Formula

Total Magnification = (Mag. of Eyepieces) X (Mag. of objective zoom range on body) X (mag. of objective lens)

Included in std. package

The ELZ and NZ are compatible with many major microscope manufacturers on the market today and for discontinued models and makers. Our precision optics provide a clear and defined image for accurate inspection or manual assembly, micro-soldering, or dissection.

OBJECTIVE LENSES

PART NUMBER	DESCRIPTION
NZ- LA- 05	0.5X AUXILIARY LENSE FOR NZ SERIES
NZ- LA- 07	0.7X AUXILIARY LENSE FOR NZ SERIES
NZ- LA- 20	2X AUXILIARY LENS FOR NZ SERIES

EYEPIECES

PART NUMBER	DESCRIPTION
NZ/ELZ-LE-W10	10X EYEPIECES FOR NZ & ELZ SERIES MICROSCOPE (PAIR)
NZ/ELZ-LE-W15	15X FOCUSABLE FOR NZ & ELZ SERIES MICROSCOPE (PAIR)
NZ/ELZ-LE-W20	20X FOCUSABLE FOR NZ & ELZ SERIES MICROSCOPE (PAIR)

CAMERA ADAPTER/ VIDEO COUPLERS

PART NUMBER	DESCRIPTION
NZ-CP-04	0.4X VIDEO ADAPTER FOR NZ SERIES SCOPE

OPTICS STEREO ZOOM MICROSCOPES

 ELZ Series Parts & Accessories

The ELZ microscope series was designed for entry-level users or companies that require good quality on a budget. High-performance optics and a small package deliver a great scope at a very affordable price. High-quality images with greater flatness are accomplished by using the optical design and quality of all the Scienscope's stereo zoom microscope series.

ELZ-BD-B2

ELZ series binocular body, 0.7x - 3x zoom w/10x eyepieces (pair) 60° inclined observation tube

SPECIFICATIONS	ELZ-BD-B2A
Eyepieces Inclination	45 degrees
Objective Zoom Range	0.67X to 4.5X
Diopter Adjustment	+/- 5 Dual Independent
Interpupillary Adjustment	50mm - 76mm
Zoom Ratio	1:6.7
Eyepieces	10X
System Magnification	6.7x to 45x w/ 10x EP
Field of View	32.8mm - 4.9mm w/ 10x EP
Working Distance	100mm
Warranty	5 Years

Maintenance-Free

Anti-mold and air-tight sealed body design eliminates the need for regular maintenance and adds additional reliability in most working environments.

NZ Binocular Optical Specifications

EYEPIECES

	10X		15X		20X		
Objective Lense	MAG	FOV	MAG	FOV	MAG	FOV	Working Distance
0.5X	3.5X- 15X	66.9- 15 mm	5.3- 22.5X	4.6-11mm	7X- 30X	36- 8.3 mm	177 mm
1X	7X- 30X	31.4- 7.3 mm	10.5X- 45X	22.9- 5.3 mm	14X- 60X	17.9- 4.0 mm	100 mm
2X	14X- 60X	16- 3.7 mm	21X- 90X	11.4- 8 mm	28X- 120X	9- 6 mm	26 mm

Optical Magnification Formula

Total Magnification = (Mag. of Eyepieces) X (Mag. of objective zoom range on body) X (mag. of objective lens)

Included in std. package

OBJECTIVE LENSES

PART NUMBER	DESCRIPTION
ELZ-LA-05	0.5X AUXILIARY LENS FOR ELZ SERIES
ELZ-LA-20	2X AUXILIARY LENS FOR ELZ SERIES

EYEPIECES

PART NUMBER	DESCRIPTION
NZ/ELZ-LE-W10	10X EYEPIECES FOR NZ & ELZ SERIES MICROSCOPE (PAIR)
NZ/ELZ-LE-W15	15X FOCUSABLE FOR NZ & ELZ SERIES MICROSCOPE (PAIR)
NZ/ELZ-LE-W20	20X FOCUSABLE FOR NZ & ELZ SERIES MICROSCOPE (PAIR)

ELZ FEATURES

- *Perfect for Entry Level Inspection*
- *Quality Construction and Optics*
- *Affordable Price*
- *Built to Last*

OPTICS STEREO ZOOM MICROSCOPES

E-Series/ CMO

CMO-BH2

The CMO-BH2 is a 20° incline semi-organic head for use with any E-series body (CMO-BD-16 or CMO-BD-110). This head has 6-inch long eye-tubes which makes for comfortable viewing without having to lean forward.

CMO-BHE

The CMO-BHE is an adjustable 0 to 45° head that allows you to set the perfect angle to inspect in perfect ergonomic form. Our eyepieces allow for a 180° rotation and a 3.5" height adjustment for multiple user comfort. Use with any E-Series zoom body to create your ideal system.

CMO-BD-110

The CMO-BD-110 is a parallel zoom body for use with any of the E-Series ergonomic microscope heads. It offers a zoom range of 0.8x to 8.0x and FOV up to 28.8mm with 10x eyepieces.

SPECIFICATIONS	CMO-BD-110
Zoom Bodies Range:	0.8x to 8.0x
Zoom Ratio:	1:10
Field of View:	28.8mm-2.8mm
Available Eyepieces:	10X and 20X
Available Objective Lens:	0.5X Achromatic and 1X Plan

CMO-BD-16

The CMO-BD-16 is a parallel zoom body for use with any of the E-Series ergonomic microscope heads. It offers a zoom range of 0.8x to 5.0x and a FOV up to 28.8mm with 10x eyepieces.

SPECIFICATIONS	CMO-BD-16
Zoom Bodies Range:	0.8x to 5.0x
Zoom Ratio:	1:6
Field of View:	28.8mm-4.6mm w/ 10x EP
Available Eyepieces:	10X and 20X
Available Objective Lens:	0.5X Achromatic and 1X Plan

CMO-CP-05A

The CMO-CP-05A is a 0.5x digital video coupler for use with CMO-BH-23 trinocular port. Use this to connect any C or CS-mount cameras.

CMO-IRIS

The CMO-IRIS is a dual parallel iris accessory for use with any E-Series head and zoom body to increase the depth of filed and control the amount of light to the eyepieces.

CMO-LA-05

0.5X Achromatic objective lens for E-Series.

CMO-LA-10

1X Plan objective lens for E-Series.

CMO-BH-23

The CMO-BH-23 is a beam splitter/trinocular port accessory for the E-Series microscope. Add this to any E-Series set up to connect a camera and instantly be able to capture images and communicate with colleagues. Use with CMO-CP-05A digital coupler and a camera.

OPTICS STEREO ZOOM MICROSCOPES ERGONOMIC OPTICS

CC-97-LN1

The Macro CC-97-LN1 is ideal for quality assurance, biomedical imaging, or assembly applications where an easy-to-view, sharp, and true-to-life magnified image of your product can mean the difference between a top-quality end product and a costly manufacturing failure. It is a close-focusing macro video lens that is versatile and specifically designed to be used in applications where objects over 1" in diameter must be imaged. It offers unsurpassed clarity and zoom capabilities and is compatible with cameras 2/3" or smaller.

SPECIFICATIONS		BASED ON 23" MONITOR	
Working Distance		**MAG**	**FOV**
5.5" WD	HIGH	90X	5mm
	LOW	20X	23mm
7" WD	HIGH	64X	8mm
	LOW	13X	34mm
8" WD	HIGH	55X	9.5mm
	LOW	11.5X	43mm
9" WD	HIGH	47X	10.5mm
	LOW	10X	48mm
10"WD	HIGH	42X	12mm
	LOW	9X	54mm

SPECIFICATIONS		BASED ON 12" MONITOR	
Working Distance		**MAG**	**FOV**
4.5" WD	HIGH	60X	4.75mm
7.75" WD	HIGH	30X	8.8mm
	LOW	10X	25mm
8" WD	HIGH	28X	9mm
	LOW	9.75X	25.5mm
9" WD	HIGH	24.5X	10.75mm
	LOW	8.75X	30mm
10"WD	HIGH	21.5X	11.8mm
	LOW	7.75X	33.75mm

- *Up to 90X with 23" monitor*
- *Up to 54mm FOV at 10" WD*
- *High depth of field*
- *Manual iris*

SB-76-39/47

The SB-76-47 is used to mount a CC-97-LN1 macro lens to any focus mount that has a 76mm diameter microscope rack. Best when used with a Scienscope focus mount (SB-AB-SZ) and any boom stand or articulating arm.

CC-97-LN1-2X

The CC-97-LN1-2X will double magnification and working distance when added to any C or CS-mount camera. It works particularly well when using a CC-97-LN1 macro lens.

MZ7A Micro-Zoom Optics & Accesories

The MZ7A-ZOOM is a modular zoom lens system that can be configured to fit nearly any application. Choose from a diverse selection of digital/video couplers and objective lenses to find the perfect magnification and FOV to meet your needs. A magnification range of 6.1x-1257x offers incredible versatility, high contrast images, and vivid colors, working distance starting at 22mm, and with the highest numerical aperture, you can achieve unmatched edge flatness and clarity.

MZ7A-ZOOM

MZ7A High resolution micro zoom lens.
0.7x to 4.5x zoom range

MZ7A-ZOOM-C

High resolution micro zoom lenswith coaxial illumination module

Micro-Zoom Optical Spefications

	0.5X		0.67X		1X		2X		
Auxiliary Lense	MAG	FOV	MAG	FOV	MAG	FOV	MAG	FOV	Working Distance
0.25X	6.1X- 39.3X	91.4- 14.2	8.2X- 52.6X	68.2- 10.6	12.2X- 78.6X	45.7- 7.1	24.4X- 157.2X	22.9- 3.6	302 mm
0.5X	12.2X- 78.6X	45.7- 7.1	16.4X- 105.3X	34.1- 5.3	24.4X- 157.2X	22.8- 3.6	48.9X- 314.3X	11.4- 1.7	176 mm
0.75X	18.3X- 117.9X	30.5- 4.5	24.6X- 157.9X	22.7- 3.5	36.7X- 235.7X	15.2- 2.4	73.3X- 471.5X	7.6- 1.2	117 mm
1X	24.4X- 157.2X	22.8- 3.6	32.8X- 210.6X	17.1- 2.7	48.9X- 314.3X	11.4- 1.8	97.8X- 628.7X	57- 0.9	96 mm
2X	48.9X- 314.3X	11.4- 1.8	65.5X- 421.2X	8.5- 1.3	97.8X- 628.7X	5.7- 0.9	195.6X- 1257.3X	2.8- 0.4	35 mm

MZ7A Micro Zoom Video Specifications Based on 23" Monitor

MZ7A VIDEO COUPLERS

PART NUMBER	DESCRIPTION
MZ7A-CP-05	0.5X COUPLER FOR HIGH RESOLUTION MICRO ZOOM LENS
MZ7A-CP-07	0.67X COUPLER FOR HIGH RESOLUTION ZOOM LENS
MZ7A-CP-10	1X COUPLER FOR HIGH RESOLUTION ZOOM LENS
MZ7A-CP-20	2X COUPLER FOR HIGH RESOLUTION MICRO ZOOM LENS

MZ7A OBJECTIVE LENSES

PART NUMBER	DESCRIPTION
MZ7A-LA-02	0.25X LENS FOR MZ7A ZOOMS LENS
MZ7A-LA-05	0.5X LENS FOR MZ7A ZOOMS LENS
MZ7A-LA-07	0.75X LENS FOR MZ7A ZOOMS LENS
MZ7A-LA-20	2X LENS FOR MZ7A ZOOMS LENS

CC-SMART 4K

The new 4k SmartCam offers 4k resolution to a live monitor with integrated measurement tools and the ability to capture images to an SD Card, a USB flash drive, or connect directly to a PC via ethernet or WiFi for capture to a hard drive. 4K UHD has 4 times the resolution of 1080p HD. The 2160p standard provides 3840x2160 pixels for sharper images with greater detail.

CAMERA SPECIFICATIONS	DESCRIPTION
Sensory Type	CMOS
Sensor Optical Format	1/1.8"
Active Pixels	8.3M (3840 X 2160)
Pixel Size	2µm x 2µm
Active Sensor Area	7.68mm X 4.32mm
Shutter	Electronic Rolling Shutter
Video Preview Resolution (HDMI)	3840 X 2160
Video Preview Framerate (HDMI)	60fps
Video Capture Resolution	3840 X 2160
Video Capture Framerate	50fps (SecureDigital)
	30fps max (Ethernet, WI-FI)
Internal Video Capture Format	MP4
Photo Capture Resolution	3840 X 2160
Internal Photo Capture	JPG
Recording Media	SecureDigital Card, USB Flash
Connectivity	HDMI, Ethernet, WI-FI
Wi-Fi Standard	802.11ac 5GHz
Power	12VDC 1A

CC-HDMI-CD1

High definition camera with 1080p(1920x1080 resolution) & HDMI output. inludes SD card, power supply, & wired tigger.

- *1080p High Definition*
- *1920 X 1080 Resolution at 60fps (24-bit)*
- *1/2.5" CMOS*
- *Image Capture on SD Card Without a PC*
- *HDMI Output with Wide Screen Format*
- *Multiple Cross Hairs for Quick Gaging*
- *Super Easy Auto-White Balance for Color Accuracy*

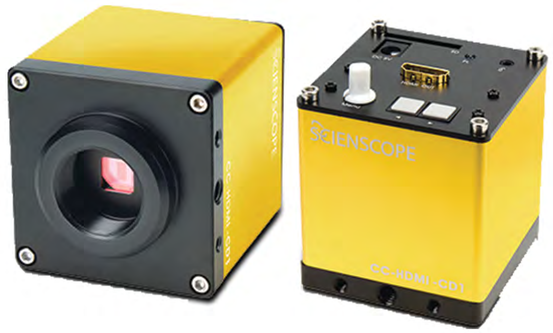

CC-HDMI-CD2

Our Amazing HDMI camera with Direct/USB output and 1080p Resolution. Very Fast refresh rate on Live Video at 60 Frames Per Second Sensor. Digital Zoom for increasing magnification.

Image Capture and Movie Capture built into camera on SD Card (No Computer Required). Compatible with all Scienscope Lenses and Microscope including Macro Lens (CC-97-LN1) and Micro Zoom (MZ7A-Zoom). Two USB Ports allows connection to a computer or network.
Video Image Express Measurement Software is a great addition.

CAMERA SPECIFICATIONS	DESCRIPTION
Image Sensor	1/2.86 Panasonic Full HD 2.0 MP
Effective Pixels	1920 X 1080
Frame Rate	60fps
Definition	More than 1200 Lines
Housing	Aluminum
White Balance	Automatic/ Manual/ Continuous
Brightness Control	Automatic/ Manual/ Continous
Color	R/G/B Adjustable
Edge Enhancement	Yes
OSD	Yes, in HDMI Mode
Freeze	Yes
HDR	Yes
SD Card	Supports up to 32 GB
Cross Hair	Multi-color, small or large
Horizontal & Vertical Lines	Multi-color, two independent lines
Noise Reduction	Supported
HDMI	1080p
USB	2.0

- *Time and Date Stamp*
- *Image and Video Gallery*
- *Wireless Mouse Support and Control*
- *On-screen Control Bar and Setting Menu*
- *Image and Video Capture to USB Card*
- *Annotation and drawing tools*

CC-HFMI-AF2

The New Auto-focus 1080p HDMI/WiFi camera can capture images to an SD Card or connect directly to a PC via WiFi to stow on the hard drive. Connect this camera to any C or C/S mount optical device to transform your microscope or optical system into a fast and easy-to-use autofocus system.

CAMERA SPECIFICATIONS	DESCRIPTION
Sensor Type	CMOS
Sensor Optical Format	1/1.8"
Active Pixels	8.3M (384
Pixels Size	2μm x 2μm
Active Sensor Area	7.68mm X 4.32mm
Shutter	Electronic Rolling Shutter
Video Preview Solution(HDMI)	3840 X 2160
Video Preview Framerame(HDMI)	60fps
Video Capture Resolution	3840 X 2160
Video Capture Framerate	50fps (SecureDigital 30fps Max (Ethernet, WI-Fi)]
Internal Video Capture Format	MP4
Photo Capture Resolution	1920 X 1080
Internal Photo Capture Format	JPG
Recording Media	SecureDigital Card
Connectivity	HDMI, WI-FI
Wi-Fi Standard	802.11ac 5HGz
Power	12VDC 1A

CC-SC-GM

Glass master for use with measurement cameras or software. 0.1mm and 1mm dots for quick calibration.

CC-VIE-2008

Video Image Express is the one and the only solution for adding a simple and easy way to capture, annotate, and measure images on any Stereo Microscope, Video Inspection System, or Camera-Based Optical Inspection Device. When it comes to Image Capture and Video Documentation, our unique "Live Image" capability increases workflow dramatically by providing tools designed with one word in mind "Simplicity."

CC-CMC-12H

The MAC3 Camera can be used as a "live-image" HD (1080p) camera or as a USB 2.0 camera with a USB cable connected to any computer or Windows Tablet. The camera can be connected to any microscope or optical system with a C mount so you can instantly upgrade your system. With a monitor mounted directly to the camera limited workspace is never a problem and your ergonomics will improve as well.

CAMERA SPECIFICATIONS	DESCRIPTION
Image Sensor	1/2.86 Inch Panasonic FULL HD 2.0MP
Effective Pixels	1920 x 1080
Frame Rate	60fps
Definition	Over 1200lines (high level)
Housing	Aluminum/ Plastic
White Balance/	Automatic / Manual / Continuous
Brightness Control	Automatic / Manual / Continuous
Color	R/G/B adjustable
Edge Enhancement	Yes
OSD	Yes, in HDMI more
Freeze Image	Yes
HDR	Yes
Edge Enhancements/ Sharpening	Yes
SD Card Slot	Support up to 32GB SD card
Cross Hair	Multi-Color, small or large
Horizontal/Vertical Lines	Multi-Color, two lines each (adjustable)
Noise Reduction	Support
HDMI	1080P
USB	USB 2.0

HD/ HDMI Mode Features

- *1080p (1920 x 1080) HD image @60fps*
- *Onscreen control bar and setting menu*
- *Image and video capture to SD card*
- *Split-Screen live image/capture image comparison (Picture in Picture)*
- *Image and Video Gallery/ Image and Video Review*
- *Vertical and horizontal line generator*
- *Save line generator configurations*
- *Wireless mouse support and control*

USB 2.0 Mode Features

- *2 Mega-Pixel resolution*
- *Image and Video capture camera ap (Windows 8 or 10)*
- *Email, Save or Print with software*
- *Image and video capture with included software*
- *Annotation and drawing tools*
- *Time and date stamp images*
- *Includes DirectShow drivers*
- *Upgrade software with FOV measurement tools*

CAMERA AND DIGITAL ACCESSORIES

Monitors

CC-LCD-12H
12” COLOR LCD MONITOR; HDMI INPUT; 1920 X 1080 RESOLUTION

CC-LCD-23H
23” COLOR LCD MONITOR; HDMI INPUT; 1920 X 1080 RESOLUTION

CC-LCD-4K
26” COLOR 4K LCD MONITOR; HDMI INPUT

CC-MM-20
DESK MOUNT ARM FOR LCD MONITOR

Fiber Optic Illumination

IL-FOI-L15
New compact 15W ultra-bright fiber optic illuminator.

SPECIFICATIONS	SCIENSCOPE IL-FOI-L15
Brightness	7kfc
Life	10,000 hrs
Color Temperature	6000 ~ 7000k
Power Input	85~ 265 VAC
Power Output	15 VAC
Fiber Adapter	5/8”
LED Power	24Watt
Warranty	1 Year (Excluding Bulb)

IL-FOI-L15 MUST BE USED WITH A FIBER OPTICS LIGHT GUIDE

FC-SP-18
Single pipe light (18”)

IL-AN-PLZR
Polarizer for FC-A2-36 fiber optic ring light guide

FC-A2-36
Annualar ring light guide, 2.3” ID, 36” fiber optic cable

FC-DP-18
Dual pipe light guide, 18” stay-put” fiber optic cable

FC-MZ7A-C
MZ7A series coaxial illumination module light guide

LED Illumination

IL-LED-DP
Independently controlled LED spot illuminator

- *Powerful 6-Watt daylight light LED illuminator*
- *Providing strong even lighting*
- *23-1/4" (590mm/each) long dual gooseneck lights*
- *Metal framework intensity control box*
- *Wide band voltage (85-265VAC/50-60Hz) power supply*

IL-LED-E1UV
Compact LED light with UV LED's & internal intensity control110V-220V

- *Compact "UV / BLACKLIGHT" LED Ring light*
- *Great for conformal coating inspection*
- *Build-in light intensity adjustment*
- *360 Dual LED ring light design*
- *Fits all Scienscope microscope bodies and zoom lens (ring adapter may be applied)*

IL-LED-E1
Compact LED ring light & internal intensity control 110V - 22V0

SPECIFICATIONS	SCIENSCOPE IL-LED-E1
Color Temperature	3500k
Power Input	90-265 VAC
Power Output	22VDC
Inner Diameter	2.3"
Power Cord Length	1.5M
Life	50,000h
Watt	6W
Quantity of LED	60

- *360 Dual LED ring light design*
- *Built-in transformer*
- *Fits all Scienscope microscope bodies and zoom lens (ring adapter may be applied)*

IL-LED-E1Q
Quadrant controlled LED ring light & internal intensity control 110V - 220V

SPECIFICATIONS	SCIENSCOPE IL-LED-E1Q
Color Temperature	3500k
Power Input	90-265 VAC
Power Output	22VDC
Inner Diameter	2.3"
Power Cord Length	1.5M
Life	50,000h
Watt	60W
Quantity of LED ball	60
Light Intensity Control	Yes
Warranty	1 Year (3 Years for LED's

- *Four quadrant variable light*
- *Independently control four equal areas of LED ring*
- *Fits all Sciescope microscope bodies and zoom lens (ring adapter may be applied)*

L-LED-E2D
Diffused compact LED ring light with internal intensity control 100-240V

SPECIFICATIONS	SCIENSCOPE IL-LED-E2D
Color Temperature	3500k
Power Input	90-265 VAC
Power Output	22VDC
Inner Diameter	2.3"
Power Cord Length	1.5M
Life	50,000h
Watt	60W
Quantity of LED ball	60
Light Intensity Control	Yes

- *Diffused plastic to reduce glare*
- *Less reflection on specular surfaces (solder, metal parts, etc.)*
- *Built-in transformer*
- *Fits all Sciescope microscope bodies and zoom lens (ring adapter may be applied)*

LED Illumination

L-LED-R2
Basic 2.3” LED ring light separate adjustable power supply

- *60-LED intensity adjustable ring light*
- *Heavy-duty solid metal control box*
- *2-7/16” (62mm) inner diameter*
- *110-240V power adapter*
- *1-7/8” (48mm in diameter) ring adapter*

IL-LED-R2D
Dome style LED diffused light ring with separate adjustable power supply

SPECIFICATIONS	SCIENSCOPE IL-LED-R2D
Brightens	1.9kfc
Color Temperature	6000k - 7000k
Power Input	90-265VAC
Power Output	30VDC
Inner Diameter	2.6”
LED Power	6W
Life	50,000h
Number of LED’s	8
Light Intensity Control	Yes

- *Adjustable diffusion dome*
- *Reduces glare for video applications*
- *UV free, Cool white light*
- *Alternative to polarizers*

IL-LED-R3
New high intensity LED ring light with polarizer

- *High intensity LED ring light with quick release polarizer*
- *Compact and adjustable light intensity*
- *Scienscope high intensity ring light (IL-LED-R3) with polarizer works great for Reflective Parts!*

IL-LED-R3E
Dome style LED diffused light ring with separate adjustable power supply

SPECIFICATIONS	SCIENSCOPE IL-LED-R3E
Brightens	1.9kfc
Color Temperature	6000k - 7000k
Power Input	90-265VAC
Power Output	30VDC
Inner Diameter	2.6”
LED Power	6W
Life	50,000h
Number of LED’s	8
Light Intensity Control	Yes

- *Adjustable diffusion*
- *Reduces glare for video applications*
- *UV free, Cool white light*
- *Alternative to polarizers*

IL-LED-R3EP
Polarizer for use with IL-LED-R3E. Perfect for eliminating glare from digital/video applications.

Boom Stands Accessories

SB-AB-SZ

76mm focus mount/ E-Arm, rack, and pinion with adjustable tension control. The SB-AB-SZ fits all Scienscope binocular microscopes, trinocular microscopes, and video inspection systems for use with all the Scienscope boom stands and articulating arms. This part can also be used with most other Microscope manufacturers'. Ask us about compatibility.

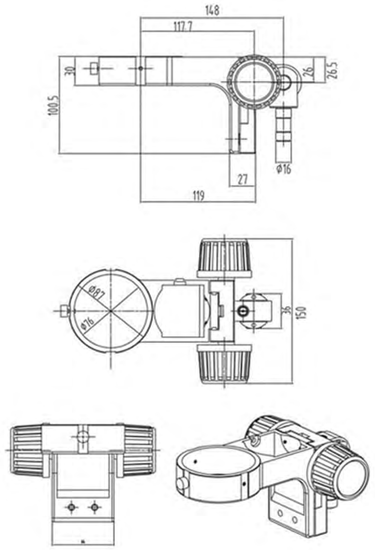

SPECIFICATIONS	SCIENSCOPE SB-AB-SZ
Hole Diameter	76mm - Standard Size
End Adapter	5/8" (15.875mm) Standard Size
Focus Travel Distance	1"
Warranty	1 Year

SB-BM2-DO

The Dual Arm Boom Stand design has a linear ball bearing for support of its horizontal arms, which creates a smooth and efficient gliding motion. This heavy-duty stand is designed to support large research-grade microscopes and offers resistance to tip-over and vibration for use with all Scienscope microscopes and optical systems. Can also be used with most other Microscope manufacturers'. Ask us about compatibility.

SPECIFICATIONS	SCIENSCOPE SB-BM2-DO
Total Weight	45lbs
Dimensions of Base	10.25" X 11.25" X 0.7"
Horizontal Arm	20" Length; 0.8 " Diameter
Vertical Post	15" Length; 1.47" Diameter
Mounting Dowel	5/8" Standard diameter
Tip Over Weight	21lb
Safety Collar	Yes
Warranty	1 Year

SB-BM2-RO

The Gliding Arm Boom Stand uses premium hard-coat anodized finish with a precision light weight rail assembly for smooth fluid horizontal movement. For use with all Scienscope microscopes and optical systems. Can also be used with most other Microscope manufacturers'. Ask us about compatibility.

SPECIFICATIONS	SCIENSCOPE SB-AB-SZ
Total Weight	740lbs
Dimensions of Base	9.5"W x 11.25"D x 1" H
Horizontal Arm	20" Length
Vertical Post	12" Length
Mounting Dowel	5/8" Standard Diameter
Tip Over Weight	21 lb
Safety Collar	Yes

SB-BM2-SO

The Single-Arm Boom Stand has a solid cross block and brass inserts to improve the vertical and horizontal arm movements. Single-arm boom stands are perfect for a routine inspection of large samples where the continuous horizontal movement of the stereo is not required. For use with all Scienscope microscopes and optical systems. Can also be used with most other Microscope manufacturers'. Ask us about compatibility.

SPECIFICATIONS	SCIENSCOPE SB-BM2-SO
Total Weight	35lbs
Dimensions of Base	10.25" x 111.25" x 0.7"
Horizontal Arm	19" Length; 0.8" Diameter
Vertical Post	15" Length; 1.47" Diameter
Mounting Dowel	5/8" Standard Diameter
Tip Over Weight	21lbs
Safety Collar	Yes
Warranty	1 Year
Optional Vertical Extension	9" (SB-BM2-SO08

STANDS MOUNTING ACCESSORIESRIES

SB-CL2-FX

This heavy-duty steel articulating arm with a vertical post is ideal for clearing bench space and making the movement of the microscope or optical system easy, includes clamp mount. For use with all Scienscope microscopes and optical systems. Can also be used with other Microscope manufacturers'. Ask us about compatibility.

SPECIFICATIONS	SCIENSCOPE SB-CL2-FX
Total Weight	30lbs
Vertical Post	15" length; 1.47" diameter
Clamp Size	2.75" wide x 2" deep
Maximum Bench Width	2.75"
Horizontal Arm Length	11.96"
Gradient Arm Length	17.52"
Front Arm Length	6.77"
Free Revolution in Horizontal Distance	360
Maximum Radius	31.5"
Minimum Radius	2.76"
Maximum Opening Angle	0-45
Diameter Mounting Hole (Front End)	5/8"
Diameter Mounting Hole (End Base)	0.87"
Weight Capacity	18.74lbs

SB-FX-01

Heavy-duty articulating arm stands with standard table clamp. For use with all Scienscope microscopes and optical systems. Can also be used with most other manufacturers' stands.

SPECIFICATIONS	SCIENSCOPE SB-FX-01
Total Weight	15lbs
Clamp Size	4" x 3" x 4.5"
Maximum Bench Width	2"
Horizontal Arm Length	11.96"
Gradient Arm Length	17.52"
Front Arm Length	6.77"
Free Revolution in Horizontal Direction	360
Maximum Radius	31.5"
Minimum Radius	2.76"
Maximum Opening Angle	0-45
Diameter Mounting Hole (Front Arm)	5/8" Standard

SB-HX-SO

With the constant force lift and pivot motion to easily extend and retract your microscope. Compact design frees up space and improves productivity. Lightweight, flexible, and ergonomic design. For use with all Scienscope microscopes and optical systems. Can also be used with most other Microscope manufacturers'. Ask us about compatibility.

SPECIFICATIONS	SCIENSCOPE SB-HX-SO
Total Weight	30 lbs
Vertical Post	15" length; 1.47" diameter
Clamp Size	4" wide x 2" deep
Maximum Bench Width	2.75"
Horizontal Arm Length	11.96"
Gradient Arm Length	17.52"
Front Arm Length	6.77"
Free Revolution in Horizontal Distance	360
Maximum Radius	31.5"
Minimum Radius	2.76"
Maximum Opening Angle	0-45
Diameter Mounting Hole (Front Arm)	5/8"

SB-TM2-FX

This heavy-duty steel articulating arm with a vertical post is ideal for clearing bench space and making the movement of the microscope or optical system easy. Includes bolt-down table mount. For use with all Scienscope microscopes and optical systems. Can also be used with most other Microscope manufacturers'. Ask us about compatibility.

SPECIFICATIONS	SCIENSCOPE SB-TM2-FX
Total Weight	30 lbs
Vertical Post	15" length; 1.47" diameter
Clamp Size	2.75" wide x 2" deep
Maximum Bench Width	2.75"
Horizontal Arm Length	11.96"
Gradient Arm Length	17.52"
Front Arm Length	6.77"
Free Revolution in Horizontal Distance	360
Maximum Radius	31.5"
Minimum Radius	2.76"
Maximum Opening Angle	0-45
Diameter Mounting Hole (Front Arm)	5/8"
Diameter Mounting Hole (End Base)	0.87"
Weight Capacity	18.74 lbs

CMO-ST-L2

Dual Illuminated LED transmitted and reflected Track Stand. Features adjustable LED transmitted and reflected light. Rack & pinion adjustment for smooth focus movement. Can also be used with most other Microscope manufacturers'. Ask us about compatibility.

SPECIFICATIONS	SCIENSCOPE CMO-ST-L2
Total Weight	7 lbs
Dimensions of Base	9.5"W x 11"D x 13.5"H
Microscope rack	76mm Standard
Vertical travel distance	4"
Warranty	1 Year

ST-76-LGT

Features large, flat, ergonomic base. Extended vertical post for greater working distance. Rack and pinion focusing with a safety collar. Ideal for smaller parts or crowded work areas and ergonomics. Work great with E-Series ergonomic microscopes.

SPECIFICATIONS	SCIENSCOPE ST-76-LGT
Total Weight	20 lbs
Dimensions of Base	20.75"H x 12.5"W x 12"L
Microscope rack	76mm Standard

CMO-DST-L2

Dual Illuminated LED transmitted and reflected Track Stand. Features adjustable LED transmitted and reflected light. Fine focus rack & pinion adjustment for smooth focus movement. Great for high magnification optics. Can also be used with most other Microscope manufacturers'. Ask us about compatibility.

SPECIFICATIONS	SCIENSCOPE CMO-DST-L2
Total Weight	7 lbs
Dimensions of Base	9.5"W x 11"D x 13.5"H
Microscope rack	76mm Standard
Vertical travel distance	4"
Warranty	1 Year

SP-76-18

Extended vertical post for great working distance. Rack and pinion focusing with a safety collar. 18" vertical travel for a greater range of movement. Ideal for smaller parts or crowded work areas. 76mm e-arm/focus mount with vertical travel of 1" up and down. Fits all our Scienscope series. Can also be used with most other Microscope manufacturers. Ask us about compatibility.

SPECIFICATIONS	SCIENSCOPE SP-76-18
Total Weight	8 lbs
Dimensions of Base	19.5"H x 11.25"W x 13"L
E-Arm/Focus Mount	76mm Standard
E-Arm Focusing Vertical Travel	1"
Travel Distance	18"
Safety Collar	Yes

ST-76-LG

Features large, flat, ergonomic base. Perfect for prolonged viewing of small parts. 76mm microscope ring mount holder. Rugged vertical gear track. Fits all our Scienscope binocular series. Can also be used with most other Microscope manufacturers'. Ask us about compatibility.

SPECIFICATIONS	SCIENSCOPE ST-76-LG
Total Weight	9 lbs
Dimensions of Base	13.75"H x 12.5"W x 12"L
Microscope rack	76mm Standard
Vertical travel distance	4"
Lowest travel distance from base to e-arm	6"
Highest travel distance from base to e-arm	10"

OPTICAL DIVISION

SCIENSCOPE

TO VIEW ALL OF OUR PRODUCTS AND ACCESSORIES VISIT
SCIENSCOPE.COM OR CALL 1 (800) 216-2900

DIGITAL MICROSCOPES | BINOCULAR MICROSCOPES | TRINOCULAR MICROSCOPES