Part Number: 1300680105

Status: Active

Overview: BradPower Cordsets and Receptacles

Description: BradPower D-Size (1 3/8"–M35) 3-Pole Reducing Tee, with 3-Pole BradPower A-Size (7/8"–M22) Drop, Red

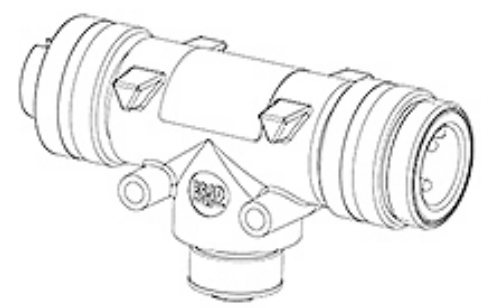

Series image - Reference only

Documents:

Drawing (PDF) | RoHS Certificate of Compliance (PDF)

Agency Certification

UL	E258922

General

Product Family	Industrial Tees and Splitters
Series	130068
IP Rating	IP67
Overview	BradPower Cordsets and Receptacles
Product Name	BradPower D-Size
Taxonomy	Industrial Tees and Splitters
Type	Power Tap Tee
UPC	78172545165

Physical

Drop Connector	BradPowerA-Size (7/8"–M22)
Drop Gender	Female
Keyway	Single
Left Trunk Connector	BradPower D-Size (1 3/8"–M35)
Left Trunk Gender	Female
Leg 1 Length	N/A
Leg 2 Length	N/A
Material - Cable Jacket	N/A
Material - Connector Body	PVC
Material - Coupling Nut	Anodized Aluminum
Net Weight	252.650/g
Poles	3
Right Trunk Connector	BradPower D-Size (1 3/8"–M35)
Right Trunk Gender	Male
Temperature Range - Operating	-20°C to +90°C

Electrical

Current - Maximum per Contact	15.0A, 32.0A
Voltage - Maximum	600V AC/DC

Material Info

Engineering Number	TC30130-200E

Reference - Drawing Numbers

Sales Drawing	SD-130068-021-001

EU ELV
Not Relevant

EU RoHS
Compliant with Exemption 6(c)

China RoHS

REACH SVHC
Not Contained Per - ED/30/2017 (7 July 2017)

Halogen-Free Status
Not Low-Halogen

For more information, please visit Contact US

China ROHS	50 Image
ELV	Not Relevant
RoHS Phthalates	Not Contained
ZZCERT_CE - Declaration of Conformity	CER_4000383479_00_000.pdf
ZZCERT_UKCA - Declaration of Conformity	CER_4000410542_00_000.pdf

Search Parts in this Series
130068 Series