Part Number: 5041930300
Status: Active
Overview: Micro-Lock™ Connectors
Description: Micro-Lock 1.25mm Pitch Single-Row Crimp Housing, White, 3 Circuits, 5041930300

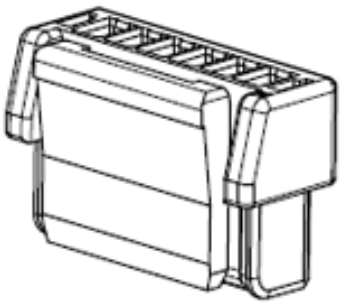

Series image - Reference only

Documents:
3D Model
Drawing (PDF)
Product Specification PS-504193-001-001 (PDF)
Application Specification AS-504193-001-001 (PDF)
Application Specification AS-504193-002-001 (PDF)
Packaging Specification SPK-504193-001-001 (PDF)
RoHS Certificate of Compliance (PDF)

General

Product Family	Crimp Housings
Series	504193
Application	Wire-to-Board
Overview	Micro-Lock™ Connectors
Product Name	Micro-Lock
UPC	887191165653

Physical

Circuits (maximum)	3
Color - Resin	White
Gender	Receptacle
Glow-Wire Capable	No
Lock to Mating Part	Yes
Material - Resin	Polyester
Net Weight	77.654/mg
Number of Rows	1
Packaging Type	Tray
Panel Mount	No
Pitch - Mating Interface	1.25mm
Pitch - Termination Interface	1.25mm
Polarized to Mating Part	Yes
Temperature Range - Operating	-25° to +85°C

Electrical

Current - Maximum per Contact	1.5A

Material Info

Reference - Drawing Numbers

Application Specification	AS-504193-001-001, AS-504193-002-001
Packaging Specification	SPK-504193-001-001
Product Specification	PS-504193-001-001
Sales Drawing	SD-504193-001

EU ELV
Not Relevant

EU RoHS
Compliant

China RoHS

REACH SVHC
Not Contained Per - ED/71/2019 (16 July 2019)

Halogen-Free Status
Not Low-Halogen

For more information, please visit Contact US

China ROHS	Green Image
ELV	Not Relevant
RoHS Phthalates	Not Contained

Search Parts in this Series
504193 Series

Mates With
504194 Micro-Lock 1.25mm Pitch Vertical Header, 504195 Micro-Lock 1.25mm Pitch Right Angle Header

Use With
Micro-Lock Wire-to-Board Crimp Terminal 5041851000