This document was generated on 09/03/2022

PLEASE CHECK WWW.MOLEX.COM FOR LATEST PART INFORMATION

Part Number: 0019092158

Status: Active

Overview: Standard .093" Pin and Socket Connectors

Description: 2.36mm Diameter Standard .093" Pin and Socket Plug Housing with Positive Latch, UL 94V-2, with Panel Mount, 15 Circuits

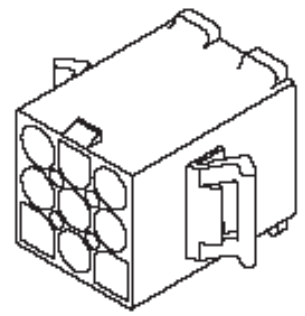

Series image - Reference only

Documents:

- 3D Model
- Drawing (PDF)
- 3D Model (PDF)
- Product Specification PS-3191-001-001 (PDF)
- Packaging Specification 31910002-PK-000 (PDF)
- Packaging Specification PK-3191-001-001 (PDF)
- RoHS Certificate of Compliance (PDF)

Agency Certification

CSA	LR19980
UL	E29179

General

Product Family	Crimp Housings
Series	3191
Application	Power, Wire-to-Wire
Comments	Polarized to Mating Part
Overview	Standard .093" Pin and Socket Connectors
Product Name	Standard .093"
Taxonomy	Connector Housings
UPC	800753594296

Physical

Circuits (maximum)	15
Circuits Detail	3x5
Color - Resin	Natural
Flammability	94V-2
Gender	Plug
Glow-Wire Capable	No
Keying to Mating Part	None
Lock to Mating Part	Yes
Material - Resin	Nylon
Net Weight	17822.000/mg
Number of Rows	3
Packaging Type	Bag
Panel Mount	Yes
Pitch - Mating Interface	6.70mm
Polarized to Mating Part	Yes
Stackable	No
Temperature Range - Operating	-40° to +105°C

Electrical

Current - Maximum per Contact	6.0A

Material Info

Engineering Number	3191-15P

Reference - Drawing Numbers

Packaging Specification	31910002-PK-000, PK-3191-001-001
Product Specification	PS-3191-001-001
Sales Drawing	31911500-SD-000

EU ELV
Not Relevant

EU RoHS
Compliant

China RoHS

REACH SVHC
Not Contained Per - D(2022)4187-DC (10 June 2022)

Halogen-Free Status
Low-Halogen

For more information, please visit Contact US

China ROHS	Green Image
ELV	Not Relevant
RoHS Phthalates	Not Contained

Search Parts in this Series
3191 Series

Mates With
19091156 , 19091159 , 5219

Use With
Standard .093" Female Crimp Terminals 1189 , 1381 , 1433 , 4550 . Standard .093" Male Crimp Terminals 1190 , 1380 , 1434 , 1973 , 42138

This document was generated on 09/03/2022
PLEASE CHECK WWW.MOLEX.COM FOR LATEST PART INFORMATION