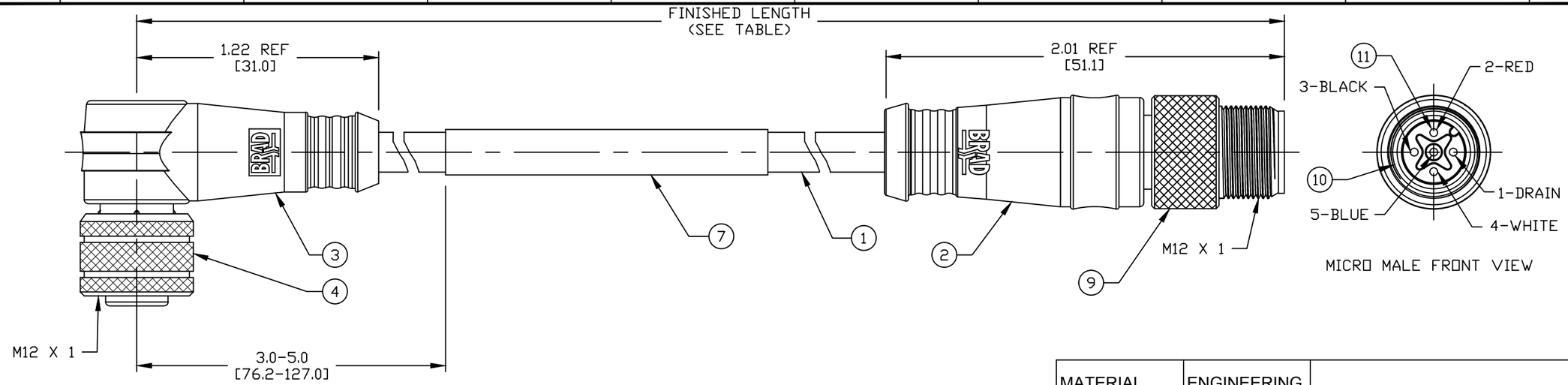

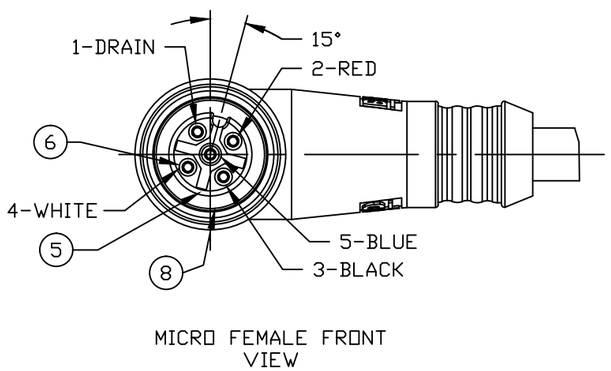

VOLTAGE RATING	30 VDC
AMPERAGE RATING	2.4 AMPS
PROTECTION	IP67
OPERATING TEMPERATURE	-20°C TO 80°C

MATERIAL NUMBER	ENGINEERING NUMBER	FINISHED LENGTH ± TOLERANCE
1300280274	130028-0274	1' 7" +1.75"/-0" [0.5M +44.5/-0mm]
1300280264	130028-0264	3' 3" +2.19"/-0" [1M +55.6/-0mm]
1300280275	130028-0275	4' 11" +2.19"/-0" [1.5M +55.6/-0mm]
1300280265	130028-0265	6' 7" +3.50"/-0" [2M +88.9/-0mm]
1300280276	130028-0276	8' 2" +3.50"/-0" [2.5M +88.9/-0mm]
1300280266	130028-0266	9' 10" +3.50"/-0" [3M +88.9/-0mm]
1300280267	130028-0267	13' 1"+6.50"/-0" [4M +165.1/-0mm]
1300280268	130028-0268	16' 4" +6.50"/-0" [5M +165.1/-0mm]

SCHEMATIC

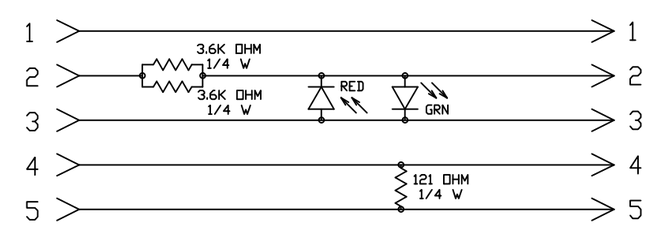

11	5	PIN CONTACT	COPPER ALLOY	GOLD PLATED
10	1	INSERT	NYLON	BLACK
9	1	COUPLING NUT	COPPER ALLOY	NICKEL PLATED
8	1	O-RING	NITRILE	RED
7	1	LABEL	VINYL (D)	BLACK/YELLOW
6	5	SOCKET CONTACT	COPPER ALLOY	GOLD PLATED
5	1	INSERT	NYLON	BLACK
4	1	COUPLING NUT	BRASS	NICKEL PLATED
3	1	OVERMOLD	TPU (D)	CLEAR (D)
2	1	OVERMOLD	TPE (D)	GRAY
1	1	DROP CABLE, 2 TWISTED PAIRS 26AWG CORD	PVC	GRAY
ITEM	QTY	DESCRIPTION	MATERIAL	FINISH

MAT. WAS PVC, COLOR WAS GRAY
EC NO: IPG2017-0030 7/12/16
DRWN: RSTONE 2016/07/13
CH'KD: K COX —
APPR: TWOLDEGE
DESCRIPTION
D
REV

QUALITY SYMBOLS
▼=0
(C)=0

GENERAL TOLERANCES (UNLESS SPECIFIED)	mm	INCH
4 PLACES	±---	±---
3 PLACES	±---	±.005
2 PLACES	±0.13	±.010
1 PLACE	±0.25	±.020
ANGULAR ±1/2°		

DRAFT WHERE APPLICABLE MUST REMAIN WITHIN DIMENSIONS

DIMENSION STYLE: IN/MM
SCALE: 1:1
DESIGN UNITS: INCH
THIRD ANGLE PROJECTION

DRAWN BY: BWOODMAN DATE: 2011/11/04
CHECKED BY: KJOZWIK DATE: 2011/11/16
APPROVED BY: ---- DATE: ----

TITLE: MIC 90D TERMINATED FEM TO MIC STR MALE SPCL KEYWAY ORIEN

molex MOLEX INCORPORATED

MATERIAL NO.: SEE TABLE
DOCUMENT NO.: SD-130028-008
SHEET NO.: 1 OF 1
SIZE: B

THIS DRAWING CONTAINS INFORMATION THAT IS PROPRIETARY TO MOLEX INCORPORATED AND SHOULD NOT BE USED WITHOUT WRITTEN PERMISSION