FEMALE PLUG M12 STRAIGHT

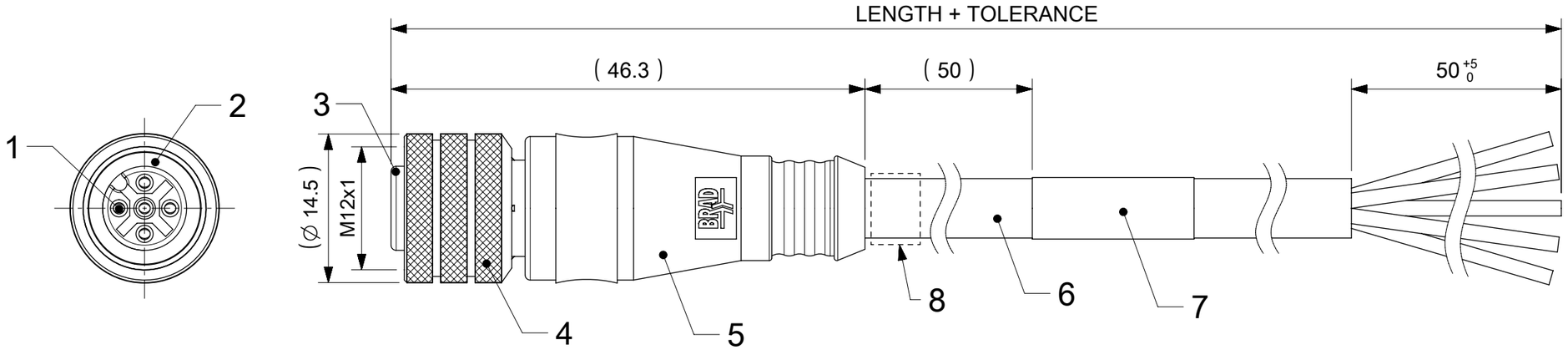

NOTES:

RATED VOLTAGE: 3, 4 contacts 250V
5 contacts 60V
8 contacts 30V

RATED CURRENT: 3, 4, 5 contacts 4A
8 contacts 2A

PROTECTION CLASS: IP 67

TEMPERATURE: -25°C / +85°C

Thicker Overmold for Cables
with bigger Outer Diameter

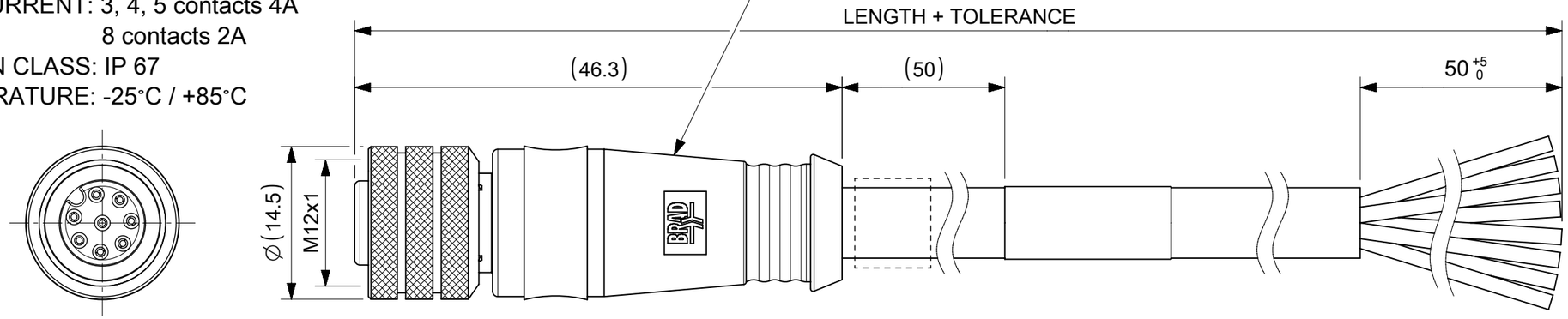

CONTACTS POSITION FRONT VIEW:

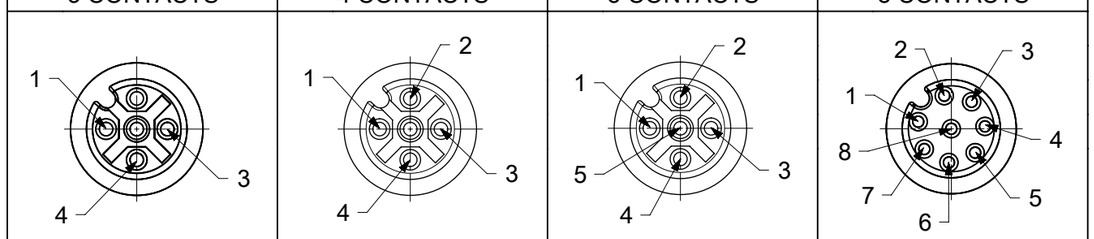

3 CONTACTS		4 CONTACTS		5 CONTACTS		8 CONTACTS	
PIN	WIRE	PIN	WIRE	PIN	WIRE	PIN	WIRE
1	BROWN	1	BROWN	1	BROWN	1	WHITE
2	---	2	WHITE	2	WHITE	2	BROWN
3	BLUE	3	BLUE	3	BLUE	3	GREEN
4	BLACK	4	BLACK	4	BLACK	4	YELLOW
5	---	5	---	5	GREY	5	GREY
						6	PINK
						7	BLUE
						8	RED
CODING REQUIRED TO IEC 61076-2-101							

FOR OPTIONS SEE - NUMERICAL CODE - ON SHEET 2

ITEM	QTY.	DESCRIPTION	MATERIAL	FINISH
8	SEE MATRIX	ID CARRIER	PVC	TRANSPARENT
7	1	LABEL YELLOW	VINYL	---
6	-	CABLE	SEE SHEET 2	---
5	-	OVERMOLDING	TPU	SEE PART LIST
4	1	COUPLING NUT FEMALE	SEE PART LIST	SEE PART LIST
3	1	INSERT FEMALE BLACK	PUR	---
2	1	ORING RED	FPM	---
1	3 / 4 / 5	CONTACT M12 FEMALE	BRONZE	SELECTIVE Au OVER Ni
	8		BRASS	SELECTIVE Au OVER Ni

THIS DRAWING CONTAINS INFORMATION THAT IS PROPRIETARY TO MOLEX ELECTRONIC TECHNOLOGIES, LLC AND SHOULD NOT BE USED WITHOUT WRITTEN PERMISSION

FUNCTIONAL SYMBOLS: = 0 / = 0 / = 0

DIVISIONAL SYMBOLS

DIMENSION UNITS: mm

SCALE: 2:1

GENERAL TOLERANCES (UNLESS SPECIFIED)

ANGULAR TOL	±	1.0 °
4 PLACES	±	
3 PLACES	±	
2 PLACES	±	0.05
1 PLACE	±	0.3
0 PLACES	±	0.5

DRAFT WHERE APPLICABLE MUST REMAIN WITHIN DIMENSIONS

CURRENT REV DESC:

EC NO: 703046
DRWN: APAWLAK01 2022/04/12
CHK'D: RSILLER 2022/04/14
APPR: RSILLER 2022/04/14

INITIAL REVISION:
DRWN: JMARSZALEK 2016/01/11
APPR: RSILLER 2016/04/08

THIRD ANGLE PROJECTION

DRAWING: A3-SIZE

SERIES: 120065

molex

CSE M12 XP AC FE STR XM SE UNSH

PRODUCT CUSTOMER DRAWING

DOCUMENT NUMBER	DOC TYPE	DOC PART	REVISION
1200651978	PSD	000	A10

MATERIAL NUMBER	CUSTOMER	SHEET NUMBER
SEE SHEET 3-4	GENERAL MARKET	1 OF 4

DOCUMENT STATUS	P1	RELEASE DATE	2022/04/14 06:15:29

FORMAT: master-tb-prod-A3
REVISION: J1
DATE: 2021/05/01

ENGINEERING NO. - NUMERICAL CODE (Available parts see PART LIST table. Others on request).

OPTIONS

8	0	X	0	0	0	X	X	X	X	X	X	X	X

- 80=M12x1 Single ended
- Contacts: 3=3 Contacts, 4=4 Contacts, 5=5 Contacts, 8=8 Contacts
- Heads style: 000=Plug Female Straight
- Cable type: See Table
- Units: M=Meter
- Length Examples: 005=0.5 unit, 010=1 unit, 100=10 units
- Overmold color: Blank (Standard)=Black, A=Grey / G=Black / Y=Yellow
- Coupling Nut: Blank (Standard) & 3=Knurled Brass Ni Plated; 1=Hexagonal Stainless steel; 5=Knurled Derlin; 7=Knurled Brass Ni Plated, Teflon Coated; 9=Knurled / Hexagonal Brass Ni Plated
- H= 2 pcs. of I/D Carrier PVC Transparent

COUPLING NUTS

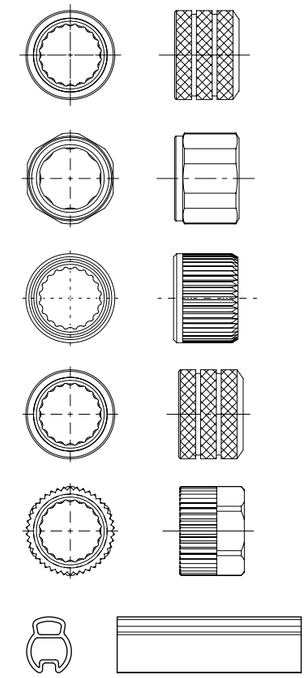

CABLE INFORMATION (for more information see Cable Data Sheet).

CABLE TYPE	NO. OF WIRES	CROSS SECTION	CABLE JACKET	UL	CSA	STATIC: TEMP. / BENDING RADIUS	DYNAMIC: TEMP. / BENDING RADIUS	DRAG CHAIN	SHIELD
E02	3 / 4 / 5 / 8	0.25mm²	PVC BLACK	UL 2464/1729	C22.2 I/II A/B 80°C/300V	-30°C to +80°C, 10xO.D.	-10°C to +80°C, 15xO.D.	-	-
E03	3 / 4 / 5	0.34mm²	PVC BLACK	UL 2464/1729	C22.2 I/II A/B 80°C/300V	-30°C to +80°C, 10xO.D.	-10°C to +80°C, 15xO.D.	-	-
H08	3 / 4 / 5 / 8	0.25mm²	PUR BLACK LS0H	UL 21198/10493	C22.2 I/II A/B 80°C/300V	-40°C to +80°C, 5xO.D.	-25°C to +80°C, 10xO.D.	2 000 000 cycles at 20°C, Temp. range +5°C to +60°C	-
H09	3 / 4 / 5	0.34mm²	PUR BLACK LS0H	UL 21198/10493	C22.2 I/II A/B 80°C/300V	-40°C to +80°C, 5xO.D.	-25°C to +80°C, 10xO.D.	2 000 000 cycles at 20°C, Temp. range +5°C to +60°C	-
P02	3 / 4 / 5 / 8	0.25mm²	PUR / PVC BLACK	-	-	-30°C to +80°C, 7xO.D.	-5°C to +80°C, 15xO.D.	-	-
P03	3 / 4 / 5	0.34mm²	PUR / PVC BLACK	-	-	-30°C to +80°C, 7xO.D.	-5°C to +80°C, 15xO.D.	-	-

CABLE LENGTH TOLERANCES

OVER	UP TO AND INCLUDING	TOLERANCES
0	305mm	+19mm
305mm	915mm	+45mm
915mm	1830mm	+56mm
1830mm	3660mm	+89mm
3660mm	7320mm	+165mm
7320mm	14640mm	+317mm
14640mm	30500mm	+610mm
30500mm	>	+2% of finished length

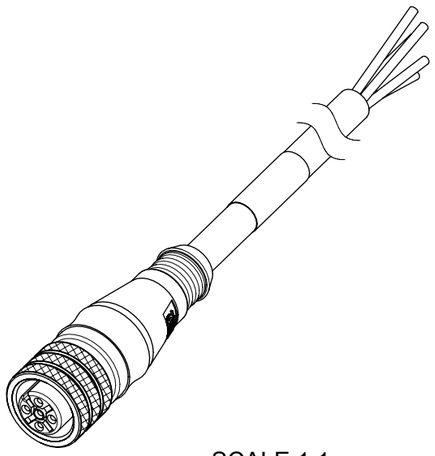

SCALE 1:1

DOCUMENT STATUS	P1	RELEASE DATE	2022/04/14 06:15:29

FORMAT: master-lb-prod-A3
REVISION: J
DATE: 2020/01/14

THIS DRAWING CONTAINS INFORMATION THAT IS PROPRIETARY TO MOLEX ELECTRONIC TECHNOLOGIES, LLC AND SHOULD NOT BE USED WITHOUT WRITTEN PERMISSION

FUNCTIONAL SYMBOLS: A = 0, C = 0, P = 0
DIVISIONAL SYMBOLS

DIMENSION UNITS	SCALE
mm	1:1

GENERAL TOLERANCES (UNLESS SPECIFIED)

ANGULAR TOL	±	1.0 °
4 PLACES	±	
3 PLACES	±	
2 PLACES	±	0.05
1 PLACE	±	0.3
0 PLACES	±	0.5

DRAFT WHERE APPLICABLE MUST REMAIN WITHIN DIMENSIONS

CURRENT REV DESC:

EC NO: 703046
DRWN: APAWLAK01 2022/04/12
CHK'D: RSILLER 2022/04/14
APPR: RSILLER 2022/04/14

INITIAL REVISION:
DRWN: JMARSZALEK 2016/01/11
APPR: RSILLER 2016/04/08

THIRD ANGLE PROJECTION | DRAWING: A3-SIZE | SERIES: 120065

molex

CSE M12 XP AC FE STR XM SE UNSH

PRODUCT CUSTOMER DRAWING

DOCUMENT NUMBER	DOC TYPE	DOC PART	REVISION
1200651978	PSD	000	A10

MATERIAL NUMBER	CUSTOMER	SHEET NUMBER
SEE SHEET 3-4	GENERAL MARKET	2 OF 4

PART LIST

No.	Part No.	Engineering No.	Cable Length
1	1200060001	803000E03M020	2m
2	1200060002	803000E03M050	5m
3	1200060003	803000E03M100	10m
4	1200060004	803000P03M020	2m
5	1200060005	803000P03M050	5m
6	1200060006	803000P03M100	10m
7	1200060014	804000E03M020	2m
8	1200060015	804000E03M050	5m
9	1200060016	804000E03M100	10m
10	1200060018	804000P03M020	2m
11	1200060019	804000P03M050	5m
12	1200060027	803000E03M006	0.6m
13	1200060032	804000E03M005	0.5m
14	1200060034	804000P03M025	2.5m
15	1200060107	803000E03M003	0.3m
16	1200060113	803000E03M030	3m
1. 18	1200060116	803000E03M0505	5m
19	1200060117	803000E03M1005	10m
20	1200060119	803000E03M150	15m
21	1200060121	803000E03M200	20m
22	1200060124	803000E03M2505	25m
23	1200060152	803000P03M010	1m
24	1200060153	803000P03M030	3m
25	1200060157	803000P03M150	15m
26	1200060158	803000P03M200	20m
27	1200060426	804000E03M010	1m
28	1200060427	804000E03M0201	** 2m
29	1200060428	804000E03M030	3m
30	1200060429	804000E03M0501	* 5m
31	1200060430	804000E03M0505	5m
32	1200060431	804000E03M150	15m
33	1200060432	804000E03M200	20m
34	1200060456	804000P03M0201	2m
35	1200060457	804000P03M030	3m

No.	Part No.	Engineering No.	Cable Length
36	1200060458	804000P03M0501	5m
37	1200060461	804000P03M200	20m
38	1200060634	805000E03M020	2m
39	1200060638	805000E03M100	10m
40	1200060646	805000P03M003	0.3m
41	1200060647	805000P03M020	2m
42	1200060649	805000P03M100	10m
43	1200061337	804000E03M0205	2m
44	1200061431	805000P03M150	15m
45	1200061528	804000E03M250	25m
46	1200061765	803000P03M002	0.2m
47	1200061785	804000P03M006	0.6m
48	1200061913	804000E03M300	30m
49	1200061958	803000E03M021	2.1m
50	1200062071	803000E03M060	6m
51	1200062098	803000P03M006	0.6m
52	1200062130	804000E03M050H	5m
53	1200062167	804000P03M100H	10m
54	1200062264	804000E03M1505	15m
55	1200062347	804000P03M050H	5m
56	1200062521	805000P03M030	3m
57	1200062772	803000P03M250	25m
58	1200062811	803000P03M100H	10m
59	1200062853	804000P03M150	15m
60	1200062866	804000E03M020H	2m
61	1200062992	804000E03M200H	20m
62	1200063121	804000P03M0053	0.5m
63	1200063224	804000E03M003	0.3m
65	1200063314	805000E03M010	1m
66	1200063402	804000P03M003	0.3m
67	1200063407	804000E03M1001	* 10m
68	1200063415	803000P03M0707	7m
69	1200063443	804000E03M030H	3m
70	1200063647	804000E03M2001	20m

No.	Part No.	Engineering No.	Cable Length
71	1200063673	803000P03M1001	10m
72	1200063779	805000E03M300	30m
73	1200063940	804000P03M0051	0.5m
74	1200064033	804000P03M120	12m
75	1200064093	803000P03M032	3.2m
76	1200064292	805000P03M200	20m
79	1200064422	804000E03M120	12m
80	1200064434	804000H09M050G	5m
81	1200065004	805000P03M0201	2m
82	1200065006	804000H09M250G	25m
83	1200065012	803000P03M030G	3m
84	1200650951	808000P02M020	2m
85	1200650952	808000P02M040	4m
86	1200650953	808000P02M050	5m
87	1200650954	808000P02M060	6m
88	1200650955	808000P02M080	8m
89	1200650956	808000P02M0801	8m
90	1200650957	808000P02M100	10m
91	1200651769	803000P03M050G	5m
92	1200651780	804000P03M050G	5m
93	1200651782	804000P03M100	10m
94	1200651792	805000P03M050	5m
95	1200651794	808000P02M010	1m
96	1200651795	808000P02M070	7m
97	1200651817	808000P02M200	20m
98	1200651818	808000P02M250	25m
99	1200651820	808000P02M300	30m
100	1200651978	805000E03M050	5m
101	1200652143	804000P03M040	4m
102	1200652144	804000P03M060	6m
103	1200652154	805000P03M060	6m
104	1200655073	808000P02M003	0.3m
105	1200655081	805000E03M150	15m

No.	Part No.	Engineering No.	Cable Length
106	1200658008	804000H09M050H	5m
107	1200658009	804000H09M100H	10m
108	1200658020	805000P03M040	4m
109	1200658021	808000P02M150	15m
110	1200658022	808000P02M030	3m
111	1200658064	804000P03M010	1m
112	1200658081	805000E03M200	20m
113	1200658165	805000E03M030	3m
114	1200658172	805000H09M020	2m
115	1200658173	805000H09M050	5m
116	1200658174	805000H09M100	10m
117	1200658175	803000H09M020	2m
118	1200658176	803000H09M050	5m
119	1200658177	803000H09M100	10m
120	1200658178	804000H09M020	2m
121	1200658179	804000H09M050	5m
122	1200658190	804000H09M100	10m
124	1200658197	805000P03M010	1m
125	1200658208	805000E03M0061	* 0.6m
126	1200658210	805000E03M0501	* 5m
127	1200658219	803000E03M0201	* 2m
128	1200658224	808000E02M050	5m
129	1200658228	804000E03M3001	* 30m
130	1200658244	808000H08M050	5m
131	1200658264	808000H08M100	10m
133	1200658277	808000E02M020	2m
134	1200658278	808000E02M100	10m
135	1200658288	804000E03M050G	5m
136	1200658309	808000E02M0501	5m
137	1200658321	804000P03M005	0.5m
138	1200658331	805000E03M050H	5m
139	1200658350	803000E03M1001	* 10m

NOTES:

* - Part No. with Yellow PVC overmolding

** - Part No. with Black PVC overmolding

DOCUMENT STATUS	P1	RELEASE DATE	2022/04/14 06:15:29

FORMAT: master-tb-prod-A3
REVISION: J
DATE: 2020/01/14

FUNCTIONAL SYMBOLS: FA = 0, FC = 0, FP = 0

DIVISIONAL SYMBOLS

THIS DRAWING CONTAINS INFORMATION THAT IS PROPRIETARY TO MOLEX ELECTRONIC TECHNOLOGIES, LLC AND SHOULD NOT BE USED WITHOUT WRITTEN PERMISSION

DIMENSION UNITS	SCALE
mm	1:1

GENERAL TOLERANCES (UNLESS SPECIFIED)

ANGULAR TOL	±	1.0 °
4 PLACES	±	
3 PLACES	±	
2 PLACES	±	0.05
1 PLACE	±	0.3
0 PLACES	±	0.5

DRAFT WHERE APPLICABLE MUST REMAIN WITHIN DIMENSIONS

CURRENT REV DESC:

EC NO: 703046
DRWN: APAWLAK01 2022/04/12
CHK'D: RSILLER 2022/04/14
APPR: RSILLER 2022/04/14

INITIAL REVISION:
DRWN: JMARSZALEK 2016/01/11
APPR: RSILLER 2016/04/08

molex

CSE M12 XP AC FE STR XM SE UNSH

PRODUCT CUSTOMER DRAWING

DOCUMENT NUMBER	DOC TYPE	DOC PART	REVISION
1200651978	PSD	000	A10

THIRD ANGLE PROJECTION	DRAWING	SERIES	MATERIAL NUMBER	CUSTOMER	SHEET NUMBER
	A3-SIZE	120065	SEE SHEET 3-4	GENERAL MARKET	3 OF 4

PART LIST

No.	Part No.	Engineering No.	Cable Length
142	1200658492	804000P03M100G	10m
143	1200658502	805000E03M005	0.5m
144	1200658503	805000E03M0201	2m
145	1200658511	808000E02M010	1m
146	1200658525	808000P02C350	0.35m
147	1200658545	804000P03M015	1.5m
148	1200658550	804000H09M015	1.5m
149	1200658551	808000E02M1001	10m
150	1200658562	803000E03M010	1m
151	1200658563	803000E03M040	4m
152	1200658570	804000E03M040	4m
153	1200658590	808000E02M030	3m
154	1200658591	808000E02M040	4m
155	1200658592	805000E03M040	4m
156	1200658609	804000P02M020	2m
157	1200658610	803000P03M040	4m
161	1200658632	805000H09M010	1m
162	1200658633	805000H09M015	1.5m
163	1200658634	805000H09M030	3m
164	1200658635	805000H09M040	4m
165	1200658636	803000H09M010	1m
166	1200658637	803000H09M015	1.5m
167	1200658638	803000H09M030	3m
168	1200658639	803000H09M040	4m
169	1200658640	804000H09M010	1m
170	1200658641	804000H09M040	4m
171	1200658642	808000H08M010	1m
172	1200658643	808000H08M015	1.5m
173	1200658644	808000H08M020	2m
174	1200658645	808000H08M030	3m
175	1200658646	808000H08M040	4m

No.	Part No.	Engineering No.	Cable Length
176	1200658780	805000H09M200	20m
177	1200658782	804000E03M060	6m
178	1200658812	808000E02M150	15m
179	1200658813	808000H08M025	2.5m
181	1200658880	804000H09M200	20m
182	1200658882	804000E03M100H	10m
183	1200658887	803000E03M020H	2m
184	1200658889	803000E03M050H	5m
185	1200658891	804000H09M003	0.3m
186	1200658894	804000E03M020G	2m
187	1200658896	804000E03M075	7.5m
188	1200658899	808000H08M250	25m
192	1200658927	804000P02M050	5m
194	1200658930	808000H08M150	15m
196	1200658983	804000E03M002	0.2m
197	1200658984	808000E02M2501	25m
199	1200658991	805000P03M100H	10m
200	1200659038	804000E02M100	10m
201	1200659040	804000E02M050	5m
202	1200659052	808000E02M2001	20m
203	1200659053	808000E02M3001	30m
209	1200659088	804000P03M050HY	5m
210	1200659092	808000P02M050Y	5m

No.	Part No.	Engineering No.	Cable Length
217	1200659123	804000P03M100HY	10m
218	1200659144	805000H09M300	30m
219	1200659187	808000E02M4001	40m
221	1200659200	808000E02M250H	25m
222	1200659207	805000E03C230	0.23m
223	1200659214	805000P03M300	30m
224	1200659256	808000E02M200	20m
225	1200659279	805000E03M007	0.7m
226	1200659280	805000E03M350	35m
227	1200659282	805000P03M005	0.5m
228	1200659283	805000P03M007	0.7m
229	1200659302	804000P03M1005	10m
230	1200659326	805000P03M020H	2m
231	1200659329	805000P03M150H	15m
232	1200659330	805000P03M200H	20m
233	1200659334	808000P02M200H	20m
234	1200659340	804000P03M1501	15m
235	1200659341	804000P03M2501	25m
236	1200659368	805000E03M015	1.5m
237	1200659370	804000P03M020Y	2m
238	1200659387	808000E02M500	50m
239	1200659388	804000P03M012	1.2m
241	1200659397	808000P02M100Y	10m
242	1200659399	808000P02M015	1.5m
243	1200659474	804000P03M250	25m
244	1200659475	804000P03M300	30m
245	1200659509	805000E03M600	60m

No.	Part No.	Engineering No.	Cable Length
246	1200659552	808000P02M050H	5m
247	1200659553	808000P02M100H	10m
248	1200659554	808000P02M150H	15m
249	1200659584	803000H09M003	0.3m
250	1200659594	805000P03M300H	30m
251	1200659595	805000P03M350H	35m
252	1200659613	808000E02M300	30m
253	1200659786	804000E02M041	4.1m
254	1200659790	804000E02M020	2m
255	1200659538	808000E02M100	10m
256	1200656061	803000E02M010	1m
257	1200656303	805000E03M050Y	5m
258	1200656436	804000P03M0601	6m
259	1200656766	808000P02M350	35m
260	1200656767	808000P02M400	40m
261	1200657197	803000E03M005	0.5m
262	1200657198	803000E03M015	1.5m
263	1200657129	804000P03M400	40m
264	1200657130	804000P03M500	50m
265	1200657131	804000E03M006	0.6m
266	1200657132	804000E03M008	0.8m
267	1200657133	804000E03M015	1.5m
268	1200657134	804000E03M024	2.4m
269	1200657135	804000E03M070	7m
270	1200657136	804000E03M080	8m
271	1200657137	804000E03M090	9m
272	1200657138	804000E03M180	18m
273	1200657139	804000E03M350	35m
274	1200657140	804000E03M400	40m
275	1200657141	804000E03M450	45m
276	1200657142	804000E03M500	50m
277	1200657143	804000E03M550	55m
278	1200657180	805000E03M070	7m
279	1200657264	805000H09M500	50m
280			

NOTES:

* - Part No. with Yellow PVC overmolding

** - Part No. with Black PVC overmolding

DOCUMENT STATUS	P1	RELEASE DATE	2022/04/14 06:15:29

FORMAT: master-tb-prod-A3
REVISION: J
DATE: 2020/01/14

FUNCTIONAL SYMBOLS: FA = 0, FC = 0, FD = 0

DIVISIONAL SYMBOLS

THIS DRAWING CONTAINS INFORMATION THAT IS PROPRIETARY TO MOLEX ELECTRONIC TECHNOLOGIES, LLC AND SHOULD NOT BE USED WITHOUT WRITTEN PERMISSION

DIMENSION UNITS	SCALE
mm	1:1

GENERAL TOLERANCES (UNLESS SPECIFIED)

ANGULAR TOL	±	1.0 °
4 PLACES	±	
3 PLACES	±	
2 PLACES	±	0.05
1 PLACE	±	0.3
0 PLACES	±	0.5

DRAFT WHERE APPLICABLE MUST REMAIN WITHIN DIMENSIONS

CURRENT REV DESC:

EC NO: 703046
DRWN: APAWLAK01 2022/04/12
CHK'D: RSILLER 2022/04/14
APPR: RSILLER 2022/04/14

INITIAL REVISION:
DRWN: JMARSZALEK 2016/01/11
APPR: RSILLER 2016/04/08

THIRD ANGLE PROJECTION | DRAWING: A3-SIZE | SERIES: 120065

molex

CSE M12 XP AC FE STR XM SE UNSH

PRODUCT CUSTOMER DRAWING

DOCUMENT NUMBER	DOC TYPE	DOC PART	REVISION
1200651978	PSD	000	A10

MATERIAL NUMBER	CUSTOMER	SHEET NUMBER
SEE SHEET 3-4	GENERAL MARKET	4 OF 4